CITY OF EDINBURG
LIFT STATION #42 REHAB & UPGRADE - REBID
EDINBURG, TEXAS

THE CITY OF Edinburg

CITY OFFICIALS

RICHARD MOLINA ..... MAYOR

DAVID TORRES..... MAYOR PRO–TEM

GILBERT ENRIQUEZ ..... COUNCILMEMBER

JORGE SALINAS ..... COUNCILMEMBER

HOMEER JASSO JR. ..... COUNCILMEMBER

RON GARZA ..... CITY MANAGER

LOCATION MAP

SCALE 1" = 2000'

SHEET INDEX

SHEET	DRAWING NO.	TITLE
1	T1	TITLE SHEET / VICINITY MAP
	CIVIL	
2	C1	GENERAL NOTES
3	C2	LIFT STATION EXISTING TOPOGRAPHY
4	C3	PROJECT CONTROL DATA
5	C4	BORING LOG
6	C5	LIFT STATION OVERALL SITE PLAN
7	C6	LIST STATION PLAN
8	C7	MATERIALS TO BE PROVIDED BY THE CITY OF EDINBURG
9	C8	FORCE MAIN- STA 0+00 TO STA 11+98.37
10	C9	FORCE MAIN- STA 11+98.37 TO STA 24+48.05
11	C10	FORCE MAIN- STA 24+48.05 TO STA 36+98.36
12	C11	FORCE MAIN- STA 36+98.36 TO STA 49+48.40
13	C12	FORCE MAIN- STA 49+48.40 TO STA 61+95.75
14	C13	FORCE MAIN- STA 61+95.75 TO STA 65+37.13
15	C14	LIFT STATION SITE DEMOLITION
16	C15	LIFT STATION DETAILS
17	C16	LIFT STATION DETAILS
18	C17	PAVEMENT DETAILS
19	C18	CURB AND GUTTER DETAILS AND CONCRETE SIDEWALK DETAILS
20	C19	HANDICAP RAMP DETAILS & WELL FOUNDATION DETAILS
21	C20	WATER/SANITARY SEWER CROSSING DETAILS SEWER STANDARD PIPE BEDDING DETAILS
22	C21	MANHOLE DETAILS
23	C22	UTILITY CROSSING AT EXISTING/ACTIVE STREET DETAIL UTILITY LINE BORE/DETAIL
24	C23	AIR RELEASE VALVE INSTALLATION & CONCRETE THRUST BLOCKS
25	C24	FENCE FOUNDATION PLAN
26	C25	FENCE ELEVATION PLAN
27	C26	FENCE ELEVATION PLAN
28	C27	MISC. DETAILS
29	C28	CONCRETE SLAB DETAILS
30	C29	LIGHT POLE FOUNDATION AND VENT DETAILS
31	C30	LANDSCAPING PLAN
32	C31	ELECTRICAL PLAN
33	C32	CONTROL PANEL STATION
34	C33	AUTOMATIC TRANSFER SWITCH STATION
35	C34	EROSION CONTROL - 1
36	C35	EROSION CONTROL - 2

LEGEND

6" FORCE MAIN ABANDONMENT

10" FORCE MAIN INSTALL

PREPARED BY:

ICE
INTERNATIONAL CONSULTING ENGINEERS
PHONE: 361.826.5805 FAX: 361.826.5806
1722 N. CLOSNER BLVD., STE B EDINBURG, TX 78541

CONSULTANT'S SHEET
PROJECT NO. 20580-04

STATE OF TEXAS · LUIS A. NAVA · 94121 · LICENSED PROFESSIONAL ENGINEER

ICE
INTERNATIONAL CONSULTING ENGINEERS
1722 N. CLOSNER BLVD., SUITE B EDINBURG, TX. 78541
PHONE: 956.259.5404 FAX: 361.826.5806
T.B.P.E. FIRM REGISTRATION #F - 10837

THE CITY OF Edinburg
415 W. UNIVERSITY DRIVE EDINBURG, TX. 78541
PHONE: 956.388.8204 FAX: 956.383.7411

REVISION NO.	DATE	BY	DESCRIPTION

CITY OF EDINBURG
LIFT STATION 42 REHAB & UPGRADE-RE BID

TITLE SHEET/LOCATION MAP

DRAWING NO.
T1

SHEET 1 of 36

FILE NAME: Z:\2020\Engineering\City of Edinburg\Lift Station #42 Rehab & Upgrade – Re Bid\Drawings\Civil\(1)-T1-TITLE SHEET.dwg LAYOUT NAME: Model PLOTTED: Thursday, June 04, 2020 – 8:30am USER: Owner

A. PAYMENT NOTES:

1. THE CONTRACTOR WILL BE RESPONSIBLE FOR OBTAINING AND PAYING ALL APPLICABLE PERMITS AND FEES. THIS IS SUBSIDIARY TO THE VARIOUS ITEMS AND SHALL NOT BE MEASURED FOR PAYMENT.
2. THE CONTRACTOR SHALL BE RESPONSIBLE TO HAUL OFF MATERIALS AT ITS OWN EXPENSE. CONTRACTOR SHALL STORE THE MATERIALS AT THE SITE AT HIS OWN RISK. CITY SHALL NOT BE HELD LIABLE IF ANY OF CONTRACTOR'S EQUIPMENT OR MATERIAL IS STOLEN OR DAMAGED. THIS WILL BE CONSIDERED SUBSIDIARY TO THE VARIOUS ITEMS AND SHALL NOT BE MEASURED FOR PAYMENT.
3. WELL POINTS AND DEWATERING ARE SUBSIDIARY TO THE VARIOUS PIPE AND TRENCH ITEMS AND SHALL NOT BE MEASURED FOR PAYMENT. SEE SECTION O. SHORING PLAN THIS SHEET.
4. HYDROSTATIC PRESSURE TESTING, CEMENT STABILIZED SAND BACKFILL AND MAGNETIC DETECTION TAPE ARE SUBSIDIARY TO THE VARIOUS PIPE AND TRENCH ITEMS AND SHALL NOT BE MEASURED FOR PAYMENT.
5. COLLECTION AND DISPOSAL OF WASTEWATER, REMOVING EXISTING PIPE AND FITTINGS, BY-PASS PUMPING FLOW DIVERSION AND TEMPORARY PIPE PLUGS ARE CONSIDERED SUBSIDIARY TO THE PIPE AND TRENCH ITEMS AND SHALL NOT BE MEASURED FOR PAYMENT.
6. TEMPORARY FENCING AND TEMPORARY GATES, BARRICADES, WARNING LIGHTS, WARNING SIGNS, ETC. ARE CONSIDERED SUBSIDIARY TO THE WORK AND SHALL NOT BE MEASURED FOR PAYMENT.
7. REMOVAL OF EXCESS SPOIL, GRADING, EXCAVATION, SELECT FILL, TOPSOIL, GRASS SODDING OR SEEDING, FERTILIZATION, AND VEGETATION WATERING ARE CONSIDERED SUBSIDIARY TO THE STORM WATER POLLUTION PREVENTION PLAN, TRENCH AND BACKFILL ITEMS AND SHALL NOT BE MEASURED FOR PAYMENT.
8. EXCAVATION, BACKFILL, TOP SLAB, RING AND COVERS, ETC. FOR MANHOLES ARE CONSIDERED SUBSIDIARY TO THE MANHOLE ITEMS AND SHALL NOT BE MEASURED FOR PAYMENT.

B. MISCELLANEOUS NOTES:

1. CONTRACTOR SHALL CONTACT INTERNATIONAL CONSULTING ENGINEERS AT (956) 329-5404, 72 HOURS PRIOR TO START OF ANY CONSTRUCTION WITHIN PROJECT SITE.
2. THE CONSTRUCTION AREAS MAY CONTAIN UNDERGROUND ELECTRIC LINES, CONDUITS MAY CONTAIN HIGH VOLTAGE OR LOW VOLTAGE ELECTRICAL WIRING. SOME ELECTRICAL WIRING MAY BE BURIED BELOW GROUND WITH CONDUITS. THE CONTRACTOR SHOULD EXERCISE CAUTION.
3. THE CONTRACTOR SHALL CONTAIN ALL CONSTRUCTION ACTIVITY WITHIN THE PROVIDED EASEMENTS. KEEP ALL EQUIPMENT A MINIMUM OF 5' CLEAR OF EXISTING FENCE LINES WHEREVER POSSIBLE.
4. THE CONTRACTOR SHALL VISIT THE EXISTING SITE LOCATION AND EXAMINE EXISTING CONDITIONS TO BE ENCOUNTERED, TO PROTECT AND CONDUCT OTHER RESEARCH NECESSARY TO ASSURE THAT HE UNDERSTANDS THE PROJECT THOROUGHLY AND ARE FULLY AWARE OF ALL CONDITIONS AND CONSTRAINTS WHICH MAY BE ENCOUNTERED DURING THE COURSE OF CONSTRUCTION.
5. EQUIPMENT AND MATERIALS SHALL NOT BE STORED ON PUBLIC RIGHT-OF-WAY DURING THE COURSE OF CONSTRUCTION WITHOUT PRIOR APPROVAL FROM CITY OF EDINBURG AGENCY.
6. ANY DAMAGE TO UNDERGROUND FACILITIES, WHETHER SHOWN OR NOT ON THE DRAWINGS, SHALL BE REPAIRED OR REPLACED BY THE CONTRACTOR AS NECESSARY TO PLACE THE FACILITIES BACK IN SERVICE AT NO INCREASE IN THE CONTRACT PRICE. ALL SUCH REPAIRS SHALL CONFORM TO THE REQUIREMENTS OF THE COMPANY OR AGENCY OPERATING THE FACILITY.
7. NO EXCAVATION SHALL REMAIN OPEN OVERNIGHT.
8. DEMOLITION MATERIALS SHALL BECOME THE PROPERTY OF THE CONTRACTOR, REMOVED FROM THE SITE AND DISPOSED OF PROPERLY. SALVAGED PUMPS, VALVES AND APPURTENANCES SHALL REMAIN CITY PROPERTY AND SHALL BE DELIVERED TO THE CITY OF EDINBURG WASTEWATER TREATMENT PLANT, UNDER THE DIRECTION OF WASTEWATER SUPERVISOR (JOSE ANGUIANO 956-292-2045).
9. REMOVAL OF EXISTING FENCE, IN AREAS TO RECEIVE NEW FENCE, WILL NOT BE PAID FOR DIRECTLY BUT SHALL BE CONSIDERED SUBSIDIARY TO THE VARIOUS BID ITEMS. EXISTING FENCE TO BE RETURNED TO CITY OF EDINBURG FOR FUTURE USE.
10. THE CONTRACTOR SHALL PROVIDE A TEMPORARY FENCE FROM THE TIME AN EXISTING FENCE IS REMOVED TO THE TIME THE PROPOSED FENCE IS PLACED. THIS WORK WILL NOT BE PAID FOR DIRECTLY BUT CONSIDERED SUBSIDIARY TO THE VARIOUS BID ITEMS.
11. ALL WORK SHALL BE PERFORMED DURING DAYLIGHT HOURS.
12. THE STORM WATER POLLUTION PREVENTION PLAN SHALL COMPLY WITH TCEQ STORMWATER REQUIREMENTS.
13. THE CONTRACTOR IS RESPONSIBLE FOR ENSURING THE SAFETY OF THE PEDESTRIANS AND ALL VEHICULAR TRAFFIC FROM CONSTRUCTION RELATED ACTIVITIES DURING THE COURSE OF THIS PROJECT.
14. THE CONTRACTOR SHALL BE RESPONSIBLE FOR TRAINING HIS EMPLOYEES AND SUBCONTRACTORS IN THE RECOGNITION AND AVOIDANCE OF UNSAFE CONDITIONS, AND IN THE REGULATIONS AND HAZARDS WHICH APPLY TO THE AREA IN WHICH THE WORK WILL TAKE PLACE.
15. ALL SAFETY EXPOSURES OR VIOLATIONS SHALL BE RECTIFIED IMMEDIATELY BY THE CONTRACTOR. THE CONTRACTOR SHALL BE RESPONSIBLE FOR PROVIDING PROTECTION OF PERSONS AND PROPERTY, AND FOR PROVIDING SAFE WORKING CONDITIONS THROUGHOUT THE WORK PROGRESS. ALL AREAS ADJACENT TO THE CONSTRUCTION AREA OR AFFECTED BY THE CONSTRUCTION MUST BE PROTECTED FROM DAMAGE, CLEANED AND RESTORED TO THE ORIGINAL CONDITION AT NO ADDITIONAL EXPENSE TO THE OWNER.
16. CONTRACTOR SHALL FOLLOW THE CITY OF EDINBURG LATEST ENGINEERING STANDARDS.
17. CONTRACTOR SHALL BE RESPONSIBLE TO MAINTAIN AN UPDATED REDLINED "AS-BUILT" SET OF PLANS ON SITE FOR INSPECTION BY THE ENGINEER, THE ENGINEER'S REPRESENTATIVE, AND THE OWNER'S REPRESENTATIVE.
18. SEEDING FOR EROSION CONTROL SHALL BE APPLIED ON ALL NON - PAVED AREAS DISTURBED BY THE CONTRACTORS OPERATIONS, INCLUDING EMBANKMENTS, GRADED AREAS, LAYDOWN AREAS, ETC.,THE QUANTITY OF PURE LIVE SEED AND TYPE REQUIRED ARE INDICATED BELOW:

COMMON NAME	SCIENTIFIC NAME	LB/ACRE OF PURE LIVE SEED FOR MIXTURES A	B
BERMUDA GRASS (HULLED)	CYNODON DACTYLON	7.4	-
BERMUDA GRASS (UNHULLED)	CYNODON DACTYLON	-	30.0

MIXTURE - A: RECOMMENDED FOR SANDY SOILS PLANTED BETWEEN DECEMBER 1 THROUGH MAY 1.

MIXTURE - B: RECOMMENDED FOR ALL SOILS PLANTED BETWEEN MAY 2 THROUGH NOVEMBER 30.

THE FERTILIZING, SEEDING, AND WATERING OPERATIONS SHALL BE ACCOMPLISHED WITH EQUIPMENT SUITABLE FOR THE REQUIRED FUNCTION. CONTRACTOR SHALL FERTILIZE AND WATER TO ASSURE 95% OF THE SEEDED AREA HAS ESTABLISHED GROWTH WITHIN 45 CALENDAR DAYS. ESTABLISHED GROWTH IS DEFINED AS AT LEAST ONE PLANT PER SQUARE FOOT WITH NO BARE SPOTS LARGER THAN TEN (10) SQUARE FEET.

B. MISCELLANEOUS NOTES: (CONT'D)

19. FILL TO BE PLACED IN A MAXIMUM OF ±8 INCH LIFTS AND COMPACTED TO A MINIMUM OF 95% STANDARD PROCTOR DENSITY PER ASTM D-698, UNLESS OTHERWISE NOTED.
20. CONTRACTOR IS RESPONSIBLE FOR CLEANING MUD AND/OR DIRT TRACKED ONTO EXISTING STREETS BY HIS WORKMEN'S, SUPPLIER'S, OR SUBCONTRACTOR'S VEHICLES. STREET MUST BE CLEANED WITHIN TWO (2) HOURS OF WHEN THE TRACKING OCCURS. NO SEPARATE PAY.
21. RETESTING OF ANY TESTING FAILURES WILL BE THE CONTRACTOR'S RESPONSIBILITY. NO SEPARATE PAY.
22. A DETECTABLE UNDERGROUND WARNING TAPE MUST BE LAID IN THE SAME TRENCH AS THE FORCE MAIN PIPE. THE DETECTABLE UNDERGROUND WARNING TAPE MUST BE LOCATED ABOVE AND PARALLEL TO THE FORCE MAIN. THE DETECTABLE UNDERGROUND WARNING TAPE MUST BEAR THE LABEL "PRESSURIZED WASTEWATER" CONTINUOUSLY REPEATED IN AT LEAST 1.5" TALL LETTERS.
23. SURVEY PERFORMED BY OTHERS.

C. STRUCTURAL NOTES:

1. ALL REINFORCED CONCRETE (TYPE "S") ON THE PROJECT SHALL BE DENSE CONCRETE MIX WITH HARD ROCK AGGREGATE, 0.4 W/C MAX, SUPERPLASTICIZER, AND 5,000 PSI MINIMUM COMPRESSIVE STRENGTH AT 28 DAYS. SUBMIT MIX DESIGNS TO THE ENGINEER FOR REVIEW PRIOR TO CONSTRUCTION.
2. ALL EXPOSED CONCRETE CORNERS SHALL BE CHAMFERED.
3. ALL STEEL REINFORCING FOR CONCRETE SHALL HAVE A MINIMUM YIELD STRENGTH OF 60,000 PSI. DEFORMED BARS SHALL MEET REQUIREMENTS OF ASTM A-615.
4. ALL CLEAR COVER FOR REBAR SHALL BE THREE (3) INCHES UNLESS OTHERWISE NOTED ON DRAWINGS.

D. PIPING AND TRENCHING NOTES:

1. ALL 10" PVC PIPE SHALL BE GREEN SDR 26.
2. WHERE THE DEPTH OF EXCAVATION EXCEEDS 5 FEET, THE CONTRACTOR WILL BE REQUIRED TO SUBMIT A TRENCH SAFETY PLAN SIGNED AND SEALED BY A REGISTERED PROFESSIONAL ENGINEER. TRENCH EXCAVATIONS SHALL NOT PRECEDE BACKFILL BY MORE THAN 200 LF. NO TRENCH SHALL BE LEFT OPEN AFTER NORMAL WORKING HOURS.
3. THE MATERIALS USED FOR PIPE BEDDING, HAUNCHING AND INITIAL BACKFILL IS DEFINED IN THE PROJECT SPECIFICATIONS AND IN DETAILS HEREIN.
4. CONTRACTOR SHALL VERIFY ALL EXISTING UTILITY LINE LOCATIONS PRIOR TO NEW CONSTRUCTION.
5. CONTRACTOR IS RESPONSIBLE FOR ALL THRUST BLOCKING, SEE DETAIL.

E. DRIVEWAYS

1. DRIVEWAY TYPE SHALL BE AS SHOWN IN THE DRIVEWAY SUMMARY ON "DRIVEWAY DETAILS".
2. DRIVEWAY SHALL BE CONSTRUCTED SUCH THAT TEXTURED SURFACES ARE NOT REQUIRED, AS IN THE CASE OF CURB RAMPS.

F. SANITARY SEWERS/STRUCTURES

1. NEITHER BLUE PVC PIPE NOR DUCTILE IRON PIPE SHALL BE USED FOR SANITARY SEWERS.
2. ABANDONED SANITARY MAINS SHALL BE FILLED WITH FLOWABLE FILL MATERIAL. (SEE MIXTURE NOTE ON THIS SHEET). THE ABANDONED MANHOLES, ABANDONED CLEAN-OUTS, AND ABANDONED AIR RELEASE VALVES SHALL BE REMOVED AND PLUGGED AND THE EXCAVATIONS SHALL BE BACK-FILLED WITH SELECT MATERIAL COMPACTED TO NATURAL GROUND DENSITY OR A MINIMUM OF 95% STD PROCTOR. ALL ABANDONMENT PROCEDURES SHALL BE PERFORMED IN ACCORDANCE WITH LATEST TCEQ REGULATIONS.
3. WHERE NEW SANITARY SEWERS ARE TO BE PLACED ADJACENT TO AN EXISTING WATERLINE AT A LATERAL CLEARANCE OF LESS THAN 9 FEET, THAT SECTION OF SEWER SHALL BE PRESSURE RATED PVC, AWWA DR18 NON-BLUE COLORED.
4. ALL MANHOLES INSTALLED ON THIS PROJECT SHALL BE FIBERGLASS. THE MANHOLE MANUFACTURER SHALL PROVIDE CERTIFICATION AND DESIGN CALCULATIONS TO THE CITY SHOWING THAT THE MANHOLES ARE DESIGNED FOR TRAFFIC LOADING (H20 DESIGN VEHICLE) AND THE APPLICABLE SOIL AND HYDROSTATIC PRESSURE LOADING CONDITIONS. MINIMUM WALL THICKNESS SHALL BE 0.50 INCH. IF REQUIRED BY THE MANUFACTURERS DESIGN, HORIZONTAL RIBS AND/OR VERTICAL STIFFENERS MAY BE UTILIZED TO ACHIEVE REQUIRED DESIGN CHARACTERISTICS.
5. MANHOLES SHALL BE DESIGNED AND FABRICATED BY CONTAINMENT SOLUTION, INC., OR ENGINEER APPROVED EQUAL.
6. THE CONTRACTOR SHALL ENSURE THAT THE SUBGRADE IS PROPERLY COMPACTED, AND BACKFILL IS PLACED PROPERLY, TO PREVENT THE MANHOLE FROM SHIFTING OR SETTLING AFTER INSTALLATION.
7. CLEANING OR PURGING OF EXISTING SANITARY SEWER LINES REQUIRED FOR CONNECTING INTO SANITARY SEWER SYSTEM SHALL BE THE CONTRACTORS RESPONSIBILITY.
8. ANY ACP DESIGNATED FOR REMOVAL SHELL BE DISPOSED OF IN STRICT ACCORDANCE WITH LOCAL, STATE, & FEDERAL REGULATIONS. DISPOSAL OF AC PIPE WILL NOT BE PAID DIRECTLY BUT SHALL BE CONSIDERED SUBSIDIARY TO UTILITY IMPROVEMENTS.

G. WATERLINES

1. CONTRACTOR SHALL BE RESPONSIBLE FOR MAKING ARRANGEMENTS WITH NORTH ALAMO WATER SUPPLY CORPORATION TO PROVIDE WATER SERVICE DURING CONSTRUCTION.
2. THE CONTRACTOR SHALL COORDINATE WITH CITY WATER DEPARTMENT PERSONNEL.
3. WHERE SANITARY SEWER AND WATERLINES CROSS, THE WATERLINE SHALL BE PLACED OVER THE SEWER WITH A MINIMUM SEPARATION OF 2 FEET. IF THIS IS NOT POSSIBLE, THE SEWER SHALL BE ENCASED WITH A STANDARD 20' LENGTH OF PRESSURE PIPE SUBSIDIARY TO THE CARRIER PIPE.

H. SPECIAL RESTRICTIONS FOR SEQUENCE WORK

1. SURFACE TREATMENT SHALL FOLLOW COMPLETED BASE WITHIN 5 DAYS.
2. DEFLECTION TESTING OF PVC SANITARY SEWER SHALL FOLLOW BACKFILL BY NOT LESS THAN 30 DAYS.
3. UTILITIES TO BE ABANDONED SHALL BE MAINTAINED BY THE CONTRACTOR AND REMAIN IN SERVICE UNTIL THE APPROPRIATE SERVICE CHANGEOVERS HAVE BEEN COMPLETED BY THE CONTRACTOR AND ACCEPTED FOR USE BY THE CITY OF EDINBURG WASTEWATER DEPARTMENT.

H. SPECIAL CONDITIONS (CONT'D)

4. TRENCH EXCAVATION SHALL NOT PRECEDE BACKFILL BY MORE THAN 200 FEET. NO TRENCH SHALL REMAIN OPEN AT ALL TIMES.
5. PRIMING AND HOT-MIX PLACING OPERATIONS SHALL NOT BE CONDUCTED ON DAYS FOR WHICH AN OZONE ADVISORY HAS BEEN ISSUED, EXCEPT FOR REPAIRS.

I. TRAFFIC

1. THE CONTRACTOR SHALL BE RESPONSIBLE FOR PROVIDING AND MAINTAINING TRAFFIC CONTROL THROUGH OUT THE DURATION OF THE CONTRACT IN ACCORDANCE WITH THE "TEXAS MANUAL ON UNIFORM TRAFFIC CONTROL DEVICES" (TEXAS M.U.T.C.D., MOST RECENT EDITION AS REVISED). CONTRACTOR TO PROVIDE TRAFFIC CONTROL PLAN SIGNED AND SEALED BY A TEXAS PROFESSIONAL ENGINEER. SIGNED AND SEALED TRAFFIC CONTROL PLAN SHALL BE SUBMITTED TO THE ENGINEER (I.C.E.) PRIOR TO CONSTRUCTION FOR REVIEW BY THE ENGINEER AND OTHER APPROPRIATE ENTITIES.

J. LIFT STATION STRUCTURES CONCRETE

1. DESIGN SHALL CONFORM TO THE LATEST BUILDING CODE REQUIREMENTS FOR STRUCTURAL CONCRETE (ACI-318) WITH SPECIAL REQUIREMENTS OF ENVIRONMENTAL ENGINEERING CONCRETE STRUCTURES (ACI-350).
2. ALL REINFORCING BARS SHALL CONFORM TO ASTM A-615, GRADE 60. ARRANGEMENT AND DETAILS OF REINFORCING STEEL, INCLUDING BAR SUPPORTS AND SPACERS, SHALL BE IN ACCORDANCE WITH THE LATEST ACI DETAILING MANUAL, UNLESS OTHERWISE NOTED.
3. ALL SLAB REINFORCEMENT SHALL HAVE A MINIMUM EXTENSION INTO THE SUPPORT N ACCORDANCE WITH THE LATEST ACI CODE. IF SUCH EXTENSION IS NOT POSSIBLE, BARS SHALL TERMINATE IN STANDARD HOOKS.
4. UNLESS OTHERWISE NOTED ON THE DRAWINGS, CONCRETE COMPRESSIVE STRENGTH AT 28 DAYS SHALL NOT BE LESS THAN THE FOLLOWING:
   - SLABS ON GRADE 4,000 P.S.I. OR 5,000 P.S.I. AS PER NOTE 1 ON SECTION C

   SECTION C. STRUCTURAL NOTES (THIS SHEET)
5. UNLESS OTHERWISE SHOWN, THE COVER FOR REINFORCING STEEL SHALL BE AS FOLLOWS:
   - SLABS
     - TOP AND BOTTOM OF FORMED SLABS ---------- 2"
     - SURFACES IN CONTACT WITH LIQUID ---------- 2"
     - BOTTOM OF SLABS ON FILL OR SOIL ---------- 3"
   - WALLS:
     - LESS THAN 12" THICK ---------- 2"
6. ANY STOP IN FRAMED CONCRETE WORK MUST BE MADE IN THE CENTER OF THE SPAN AND INCORPORATE AN APPROVED KEYWAY. REINFORCEMENT SHALL EXTEND THROUGH THESE JOINTS IF REQUIRED FOR CONTINUITY.
7. ALL EXPOSED EDGES OF BEAMS, COLUMNS, SLABS AND WALLS SHALL BE CHAMFERED 3/4" UNLESS MASONRY OR OTHER MEMBERS ARE ERECTED FLUSH WITH THEM.
8. REFER TO ARCHITECTURAL, PROCESS, MECHANICAL AND ELECTRICAL DRAWINGS FOR ALL SLEEVES, PIPES, CONDUITS AND MISCELLANEOUS ANCHORING DEVICES TO BE INCORPORATED IN THE CONSTRUCTION.

K. FIBERGLASS REINFORCED PLASTIC (FRP) NOTES:

1. ALL FIBERGLASS REINFORCED PLASTIC (FRP) ITEMS SHALL BE FABRICATED PER SPECIFICATION #027205

L. PAVING CONSTRUCTION NOTES:

1. WHERE EXISTING ASPHALT AND CONCRETE ARE TO BE CUT, THESE CUTS SHALL BE VERTICAL AND MADE WITH A SAW.
2. FLEXIBLE BASE MATERIAL MEETING 2004 TxDOT ITEM 247, TYPE "E", GRADE 4.
3. FLEXIBLE BASE SHALL BE COMPACTED TO A MINIMUM OF 95% MODIFIED PROCTOR DENSITY (ASTM D1557) AT NOT LESS THAN 1% BELOW OPTIMUM MOISTURE & NO MORE THAN 3% ABOVE OPTIMUM MOISTURE.
4. PRIME COAT MATERIAL SHALL BE MC-30 APPLIED AT A RATE OF 0.15 GAL/SY.
5. TYPES AND RATES FOR SURFACE TREATMENTS SHALL BE: HOT MIX ASPHALTIC CONCRETE AND SHALL MEET THE REQUIRED TXDOT ITEM-340.
6. CARE SHALL BE TAKEN TO PROTECT CURB & GUTTER AND OTHER CONCRETE SURFACES FROM ASPHALT SPLATTER DURING PRIMING AND SEALING OPERATIONS.
7. HOT MIX ASPHALTIC CONCRETE TRANSPORT TRUCKS TO BE EQUIPPED WITH CANVAS COVERS TO BE UTILIZED DURING MATERIAL HAULING. MATERIAL DELIVERED TO SITE AT IMPROPER TEMPERATURE SHALL BE REJECTED. HOT MIX SHALL BE LAID AT A MINIMUM TEMPERATURE OF 225°F.
8. ANY SETTLEMENT UNDER PAVEMENT DUE TO INADEQUATE COMPACTION OF UTILITY LINE BACK FILL SHALL BE CAUSE FOR RECOMPACTION OF TRENCH AND REPLACEMENT OF PAVEMENT SECTION.

M. CURB AND GUTTER

1. THE AREA BEHIND THE SIDEWALK SHALL BE GRADED WITH TOP SOIL THAT IS FREE OF DEBRIS, BASE, ASPHALT, AND CONCRETE AS DIRECTED BY THE ENGINEER.
2. CURB & GUTTER SHALL BE STANDARD 6" CURB UNLESS DIRECTED OTHERWISE BY THE ENGINEER TO PROVIDE POSITIVE DRAINAGE TO STREET.
3. AN ASPHALT IMPREGNATED FIBERBOARD EXPANSION JOINT WITH 2 #4 DOWELS X 18" LONG SHALL BE USED WHERE NEW CURB MATCHES EXISTING.

N. FLOWABLE FILL MATERIAL:

'DARAFILL' ADMIXTURE MANUFACTURED BY GRACE CONSTRUCTION PRODUCTS. THE FLOWABLE FILL SHALL BE SUPPLIED WITH THE FOLLOWING MIXTURE
100lbs/CY PORTLAND CEMENT
250lbs/CY WATER
300lbs/CY FLY ASH
2100lbs/CY SAND
6oz/CY DARAFILL
BY AN APPROVED READY-MIX SUPPLIER. THE MANUFACTURER'S REPRESENTATIVE SHALL BE CONSULTED FOR ANY FINAL ADJUSTMENTS TO IMPROVE FOR FLOWABILITY OF THE MIXTURE.

O. SHORING PLAN

1. CONTRACTOR TO PROVIDE SHORING PLAN SIGNED AND SEALED BY TEXAS PROFESSIONAL ENGINEER.

P. OLD FORCE MAIN REMOVAL

1. OLD FORCE MAIN TO BE ABANDONED IN PLACE. SEE NOTE F.2, THIS SHEET.

Q. GENERAL CONSTRUCTION SEQUENCE

1. INSTALL SW3P.
2. INSTALL TRAFFIC CONTROL.
3. INSTALL PROPOSED ±1,840 L.F. OF 10" FORCE MAIN.
4. INSTALL DE-WATERING SYSTEM
5. INSTALL PROPOSED LIFT STATION.
6. CLEAN, PLUG AND ABANDON EXISTING 6" FORCE MAIN.

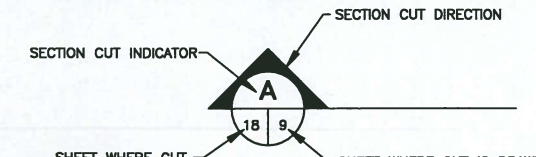

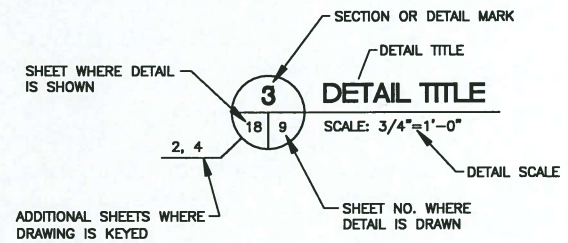

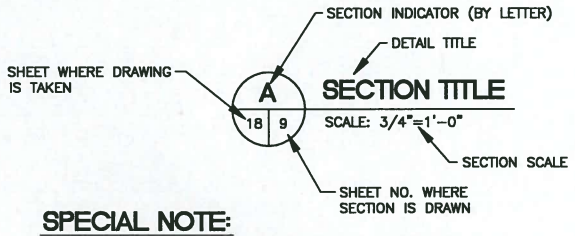

SPECIAL NOTE:

THE LOCATION AND DEPTH OF EXISTING UTILITIES SHOWN HEREON, ARE BASED UPON AVAILABLE PLANS, UTILITY MAPS, AND VISUAL INSPECTION. THERE IS NO GUARANTEE THAT SAID LINES HAVE ACTUALLY BEEN CONSTRUCTED AS SHOWN. THE CONTRACTOR SHALL CONTACT ALL UTILITY LOCATORS AS NOTED ON COVER SHEET AND SHALL VERIFY BY HIS OWN FIELD EXPLORATION, THE LOCATION AND DEPTH OF ALL UTILITY LINES PRIOR TO CONSTRUCTION OF PROPOSED IMPROVEMENTS. ANY CONFLICTS FOUND BY SUCH EXPLORATION SHALL BE IMMEDIATELY BROUGHT TO THE ATTENTION OF THE ENGINEER.

TESTING SCHEDULE

DESCRIPTION	RATE	QUANTITY
SOILS:		
STANDARD PROCTOR - SUBGRADE	PER STREET	1
DENSITIES - SUBGRADE (PAVEMENT)	PER 325 SY	1
BASE: SIEVE		
SIEVE ANALYSIS	PER 3000 CY	1
ATTERBURG LIMITS	PER 3000 CY	1
MODIFIED PROCTOR	PER 3000 CY	1
L.A. ABRASION	PER 3000 CY	1
CBR (STANDARD)	PER MATERIAL SOURCE	1
DENSITIES OF COMPACTED BASE (PAVEMENT)	PER 325 SY	1
WET BALL MILL TEST	PER MATERIAL SOURCE	1
TRIAXIAL TEST	PER MATERIAL SOURCE	1
HOT-MIX ASPHALT CONCRETE (HMAC):		
EXTRACTION, SIEVE ANALYSIS	PER 500 TONS OR DAY	1
LAB DENSITY & STABILITY	PER 500 TONS OR DAY	1
THEORETICAL DENSITY (RICE METHOD)	PER 500 TONS OR DAY	1
TEMPERATURE - DURING LAY-DOWN	CONTINUOUS AS NEEDED	-
THICKNESS - IN PLACE (CORE)	PER 1000 LF	1
% AIR VOIDS - IN PLACE (CORE)	PER 1000 LF	1
% THEORETICAL DENSITY - IN PLACE (CORE)	PER 1000 LF	1
CONCRETE: (UNCONFINED COMPRESSION, 7, 14, & 28 DAY) CURB & GUTTER, CONCRETE CAP, FOOTINGS, GENERATOR PAD, MOW STRIP & COLLARDS.	PER 4000 SF	1

NOTE: CONTRACTOR TO COORDINATE WITH ENGINEER FOR MATERIAL TESTING AND LOCATION.

CALL BEFORE YOU DIG!

DIG TESS PARTICIPANTS REQUEST 48 HOURS NOTICE BEFORE YOU DIG, DRILL, OR BLAST - STOP AND CALL

Texas Excavation Safety System
1-800-344-8377

TEXAS ONE CALL SYSTEM AT 1-800-245-4545

THE LONE STAR NOTIFICATION COMPANY AT 1-800-669-8344

CONSULTANT'S SHEET
PROJECT NO. 20580-04

ICE
INTERNATIONAL CONSULTING ENGINEERS
1722 N. CLOSNER BLVD., SUITE B
EDINBURG, TX 78541
PHONE: 956.329.5404
FAX: 361.826.5805
T.B.P.E. FIRM REGISTRATION #F- 10837

THE CITY OF Edinburg
415 W. UNIVERSITY DRIVE
EDINBURG, TX 78541
PHONE: 956.388.8204
FAX: 956.383.7411

REVISION NO.	DATE	BY	DESCRIPTION

CITY OF EDINBURG
LIFT STATION 42 REHAB & UPGRADE-RE BID

GENERAL NOTES & TESTING SCHEDULES

DRAWING NO. C1

SHEET 2 of 36

FILE NAME: Z:\2020\Engineering\City of Edinburg\Lift Station #42 Rehab & Upgrade - Re Bid\Drawings\Civil\(2)-C1-GENERAL NOTES.dwg LAYOUT NAME: Model PLOTTED: Thursday, June 04, 2020 - 8:30am USER: Owner

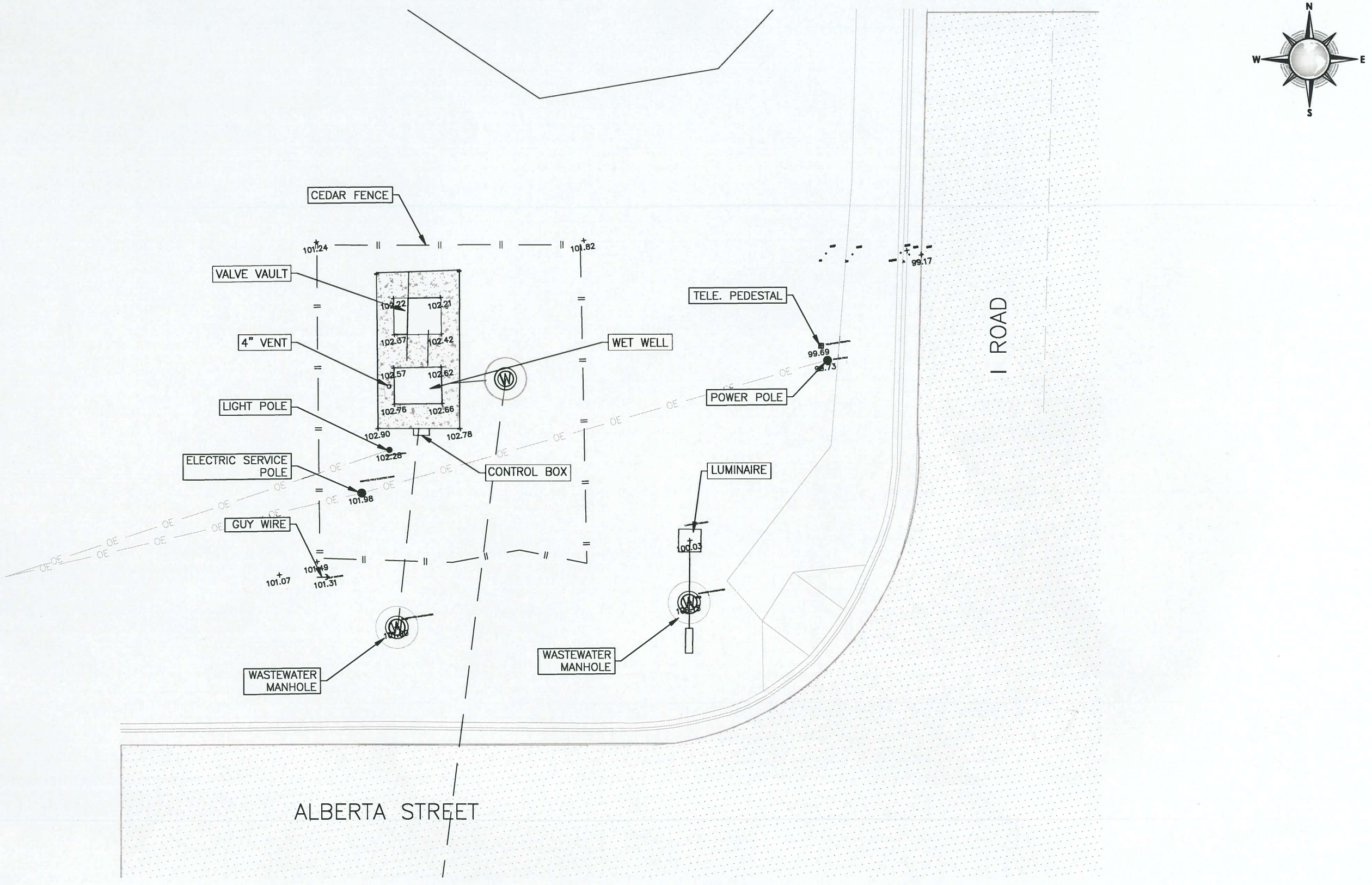

1 C2 C2 **LIFT STATION EXISTING TOPOGRAPHY**

SCALE: 1"=10'

10 0 10 20

SCALE: 1"=10'

CONSULTANT'S SHEET
PROJECT NO. 20580-04

STATE OF TEXAS · LUIS J. NAVA · 94121 · LICENSED PROFESSIONAL ENGINEER

IE INTERNATIONAL CONSULTING ENGINEERS
1723 N. CLOSNER BLVD., SUITE B
EDINBURG, TX 78541
PHONE: 956.329.5404
FAX: 361.826.8006
T.B.P.E. FIRM REGISTRATION #F-10837

THE CITY OF Edinburg
415 W. UNIVERSITY DRIVE
EDINBURG, TX 78541
PHONE: 956.388.8204
FAX: 956.383.7411

CITY OF EDINBURG
LIFT STATION 42 REHAB & UPGRADE-RE BID

LIFT STATION EXISTING TOPOGRAPHY

DRAWING NO. C2

SHEET 3 of 36

REVISION NO.	DATE	BY	DESCRIPTION

FILE NAME: Z:\2020\Engineering\City of Edinburg\Lift Station #42 Rehab & Upgrade – Re Bid\Drawings\Civil\(3)-C2-LIFT STATION EXISTING TOPOGRAPHY.dwg LAYOUT NAME: Layout1 PLOTTED: Thursday, June 04, 2020 – 8:30am USER: Owner

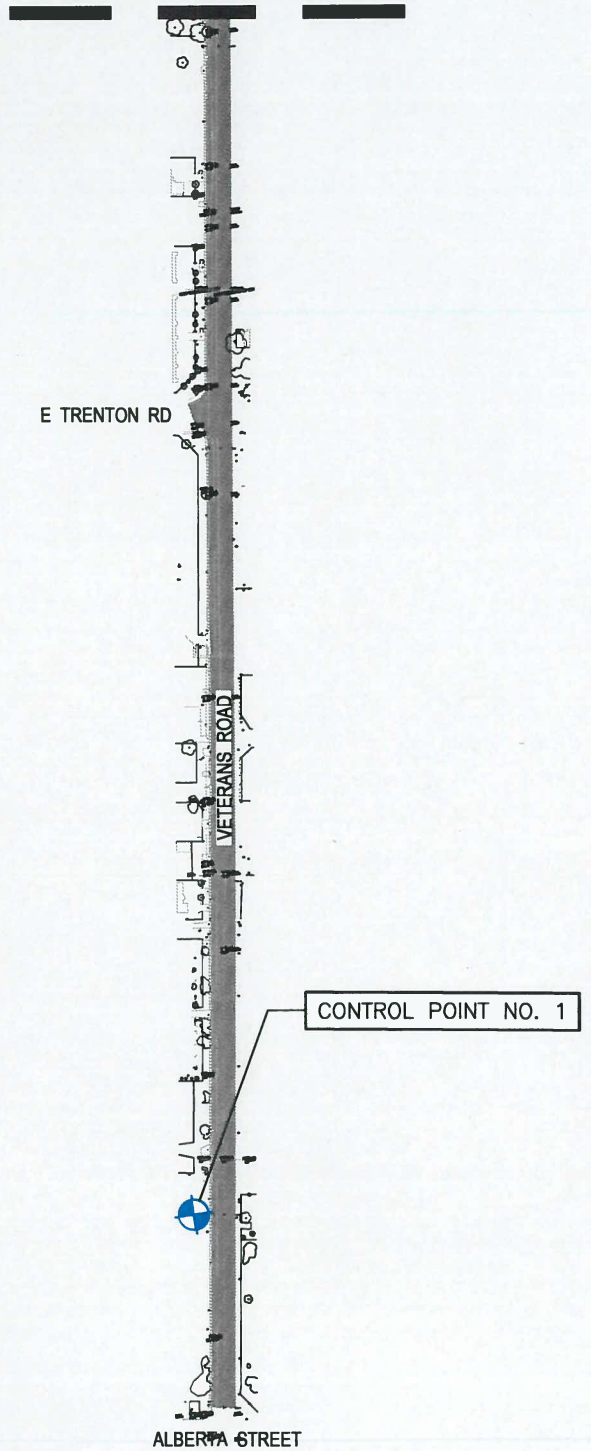

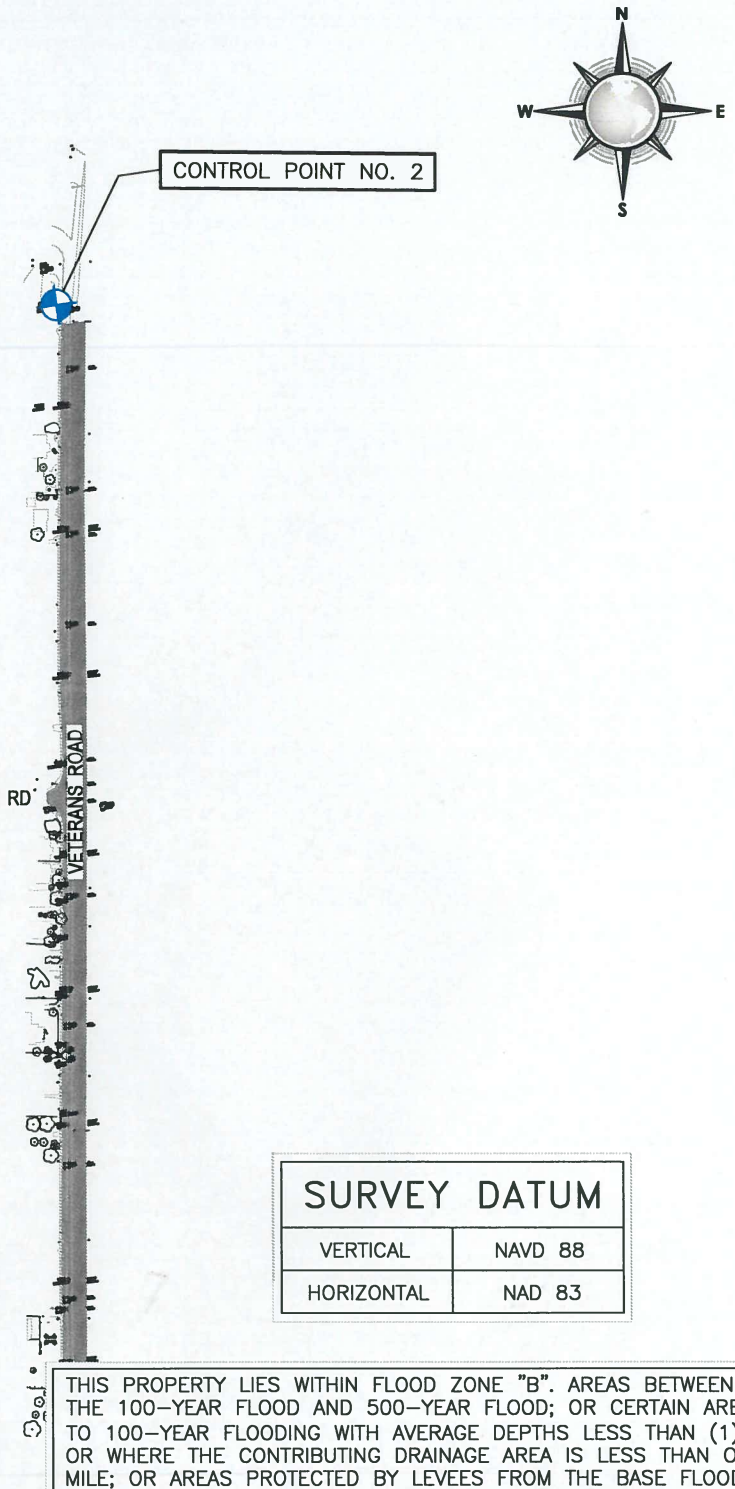

SURVEY DATUM	
VERTICAL	NAVD 88
HORIZONTAL	NAD 83

THIS PROPERTY LIES WITHIN FLOOD ZONE "B". AREAS BETWEEN LIMITS OF THE 100-YEAR FLOOD AND 500-YEAR FLOOD; OR CERTAIN AREAS SUBJECT TO 100-YEAR FLOODING WITH AVERAGE DEPTHS LESS THAN (1) ONE FOOT OR WHERE THE CONTRIBUTING DRAINAGE AREA IS LESS THAN ONE SQUARE MILE; OR AREAS PROTECTED BY LEVEES FROM THE BASE FLOOD. FEMA FLOOD INSURANCE RATE MAP COMMUNITY PANEL NO. 480334 0425 C, WITH THE LAST REVISION DATED NOVEMBER 16, 1982. (REFERENCED TO THE NATIONAL GEODETIC VERTICAL DATUM OF 1929).

CONTROL POINT DATA

CONTROL POINT #	DESCRIPTION	NORTHING	EASTING	ELEVATION
1	FND 1/2" REBAR	16617828.85	1096573.86	101.84'
2	FND 1/2" REBAR	16623759.76	1097470.83	97.76'

1 / C3 C3 — PROJECT CONTROL DATA
SCALE: 1"=500'

500 0 500 1000
SCALE: 1"=500'

CONSULTANT'S SHEET
PROJECT NO. 20580-04

STATE OF TEXAS — LUIS J. NAVA — 94122 — REGISTERED PROFESSIONAL ENGINEER

IE
INTERNATIONAL CONSULTING ENGINEERS
1722 N. CLOSNER BLVD., SUITE B
EDINBURG, TX 78541
PHONE: 956.329.5404
FAX: 361.826.5309
T.B.P.E. FIRM REGISTRATION #F-10837

THE CITY OF Edinburg
415 W. UNIVERSITY DRIVE
EDINBURG, TX 78541
PHONE: 956.388.8204
FAX: 956.383.7411

CITY OF EDINBURG
LIFT STATION 42 REHAB & UPGRADE-RE BID

PROJECT CONTROL DATA

DRAWING NO. C3

SHEET 4 of 36

REVISION NO. | DATE | BY | DESCRIPTION

FILE NAME: Z:\2020\Engineering\City of Edinburg\Lift Station #42 Rehab & Upgrade - Re Bid\Drawings\Civil\(6)-C3-PROJECT CONTROL DATA.dwg LAYOUT NAME: Layout1 PLOTTED: Thursday, June 04, 2020 - 8:31am USER: Owner

LOG OF BORING NO. B-1

City of Edinburg Lift Station No. 42 Rehabilitation
Near the NW Corner of N. I Road and E. Alberta Road
Edinburg, Hidalgo County, Texas

RABA KISTNER
TBPE Firm Registration No. F-3257

DRILLING METHOD: Straight Flight Auger **LOCATION:** See Figure 1

DEPTH, FT	SYMBOL	SAMPLES	DESCRIPTION OF MATERIAL SURFACE ELEVATION: Existing Grade, ft	BLOWS PER FT	UNIT DRY WEIGHT, pcf	SHEAR STRENGTH, TONS/FT² (0.5 1.0 1.5 2.0 2.5 3.0 3.5 4.0) PLASTIC LIMIT / WATER CONTENT / LIQUID LIMIT (10 20 30 40 50 60 70 80)	PLASTICITY INDEX	% -200
			SANDY LEAN CLAY (CL) stiff to firm, brown, with calcareous nodules and some pieces of asphalt constituents extending down to a depth of about 1 ft	13 6			16	52
5			**SANDY LEAN CLAY (CL)** soft to very soft, brown to light brown, with black ferrous stains	4			15	
10							21	
15				2				
20			**CLAYEY SAND (SC)** loose, brown, with some gravel	6				
25			**LEAN CLAY with SAND (CL)** very stiff to hard, brown, with calcareous nodules	23				81
30				32				
35			- with black ferrous stains below a depth of about 35 ft	27				
40			Boring terminated at a depth of about 40 ft.	35				
45			NOTES: During the drilling operations, groundwater was encountered at a depth of about 17.5 ft. Upon completion of the drilling operations, groundwater was measured at a depth of about 18 ft.					

DEPTH DRILLED:	40.0 ft	**DEPTH TO WATER:**	17.5 ft	**PROJ. No.:**	AMA18-001-00
DATE DRILLED:	4/12/2018	**DATE MEASURED:**	4/12/2018	**FIGURE:**	2

NOTE: THESE LOGS SHOULD NOT BE USED SEPARATELY FROM THE PROJECT REPORT

1 C4 | C4 SOIL BORING LOG

NOTES:

1. THE CONTRACTOR'S ATTENTION IS DIRECTED TO THE POTENTIAL WATER-BEARING SILTS AND SANDS SHOWN IN THE BORING LOG. THESE LAYERS MAY/WILL BE PENETRATED DURING THE EXCAVATION AND CONSTRUCTION OF THE PROPOSED SITE STRUCTURES AND COULD PRODUCE SIGNIFICANT AMOUNTS OF GROUNDWATER. THE GROUNDWATER WILL NEED TO BE CAREFULLY CONTROLLED TO MAINTAIN A STABLE EXCAVATION AND ALLOW SUCCESSFUL INSTALLATION OF THE SITE STRUCTURES.

   ATTEMPTING TO CONTROL GROUNDWATER BY PUMPING FROM WITHIN THE EXCAVATION WILL LIKELY RESULT IN AN UNSTABLE EXCAVATION. INSTALLATION OF WELLS AND/OR WELL POINTS OUTSIDE OF THE LIMITS OF THE EXCAVATION WILL LIKELY BE NECESSARY TO DEPRESS THE GROUNDWATER ENOUGH TO ALLOW SUCCESSFUL COMPLETION OF THE STRUCTURE INSTALLATION.

   CONTRACTOR TO PROVIDE DE-WATERING PLAN FOR ENGINEER'S REVIEW AS PART OF BID.

CONSULTANT'S SHEET
PROJECT NO. 20580-04

STATE OF TEXAS · LUIS J. NAVA · 94121 · LICENSED PROFESSIONAL ENGINEER

INTERNATIONAL CONSULTING ENGINEERS
1722 N. CLOSNER BLVD., SUITE B
EDINBURG, TX. 78541
PHONE: 956.329.5404
FAX: 361.826.3806
T.B.P.E. FIRM REGISTRATION #F-10837

THE CITY OF Edinburg
415 W. UNIVERSITY DRIVE
EDINBURG, TX. 78541
PHONE: 956.388-8204
FAX: 956-383-7411

CITY OF EDINBURG
LIFT STATION 42 REHAB & UPGRADE-RE BID

BORING LOG

DRAWING NO. C4

SHEET 5 of 36

REVISION NO. | DATE | BY | DESCRIPTION

FILE NAME: Z:\2020\Engineering\City of Edinburg\Lift Station #42 Rehab & Upgrade - Re Bid\Drawings\Civil(S)-C4-BORING LOG.dwg LAYOUT NAME: Layout1 PLOTTED: Thursday, June 04, 2020 - 8:31am USER: Owner

FILE NAME: Z:\2020\Engineering\City of Edinburg\Lift Station #42 Rehab & Upgrade - Re Bid\Drawings\Civil\(9)-C5-LIFT STATION OVERALL SITE PLAN.dwg LAYOUT NAME: Layout1 PLOTTED: Thursday, June 04, 2020 - 8:31am USER: Owner

FOUND ½ INCH IRON ROD w/ HALFF CAP

FOUND ½ INCH IRON ROD w/ HALFF CAP

SEE NOTE 4 THIS SHEET. (x2)

CITY OF EDINBURG
DOC. NO. 3051915
O.R.H.C.T.
0.1906 AC.

15.00' TENNECO OIL COMPANY EASEMENT VOL. 1148, PG. 647 H.C.D.R.

PROP. 13.00' (TYP.) ASPHALT DRIVE EDGE-TO-EDGE SEE 4/C27

DETAIL C-C

DETAIL B-B (DETAIL 2/SHEET C27)

RAMP 14'-1"

DETAIL A-A (DETAIL 1/SHEET C27)

CITY OF EDINBURG
DOC. NO. 584468
O.R.H.C.T.
0.121 AC.

EXIST. WET WELL (TO REMAIN IN PLACE)

EXIST. MANHOLE (TO REMAIN IN PLACE)

CAUTION
OVERHEAD ELECTRICAL LINES

FOUND ½ INCH IRON ROD w/ HALFF CAP

FOUND ½ INCH IRON ROD w/ HALFF CAP

GUY ANCHOR

GUY ANCHOR

POWER POLE

POWER POLE

LEGEND

- PROP. LIFT STATION R.O.W.
- EXIST. LIFT STATION R.O.W.
- EXIST. ROAD R.O.W.
- EXIST. EASEMENT
- PROP. UNDERGROUND ELECTRICAL
- EXIST. FENCE
- [FL=77.0'] PROP. FLOWLINE
- PROP. LUMINAIRE

NOTES:

1. CONTRACTOR SHALL SUBMIT A TEMPORARY BYPASS PUMPING PLAN SIGNED & SEALED BY A TEXAS PROFESSIONAL ENGINEER.
2. EXISTING LIFT STATION TO BE SIMULTANEOUSLY IN OPERATION WITH PROPOSED LIFT STATION BEFORE DECOMMISSIONING.
3. LIFT STATION RIGHT OF WAY AS DESCRIBED IN RIGHT OF WAY DEED RECORDED IN DOCUMENT 3051915, OFFICIAL RECORDS OF HIDALGO COUNTY, TEXAS AND WARRANTY DEED RECORDED IN DOCUMENT NUMBER 584468, OFFICIAL RECORDS OF HIDALGO COUNTY, TEXAS.
4. SEE DETAIL 1/C29 FOR LIGHT POLE FOUNDATION.

KEYED NOTES:

- (A) INSTALL 6" PVC SCH 40 VENT. (DETAIL 3/C29)
- (B) INSTALL AND CONNECT 100 LF OF 10" SDR 18 PVC FORCE MAIN LINE TO 10" FORCE MAIN BY OTHERS.
- (C) INSTALL THRUST BLOCKS AS PER 1/C23.

1 C5 C5 **OVERALL SITE PLAN**
SCALE: 1"=10'

10 0 10 20
SCALE: 1"=10'

CONSULTANT'S SHEET
PROJECT NO. 20580-04

STATE OF TEXAS LUIS J. NAVA 94121 LICENSED PROFESSIONAL ENGINEER
INTERNATIONAL CONSULTING ENGINEERS
1721 N. CLOSNER BLVD., SUITE B EDINBURG, TX. 78541
PHONE: 956.320.8404 FAX: 361.826.8306
T.B.P.E. FIRM REGISTRATION #F - 10837
THE CITY OF Edinburg
415 W. UNIVERSITY DRIVE EDINBURG, TX. 78541
PHONE: 956.388-8204 FAX: 956-383-7411

REVISION NO.	DATE	BY	DESCRIPTION

CITY OF EDINBURG
LIFT STATION 42 REHAB & UPGRADE-RE BID

LIFT STATION OVERALL SITE PLAN

DRAWING NO. C5

SHEET 6 of 36

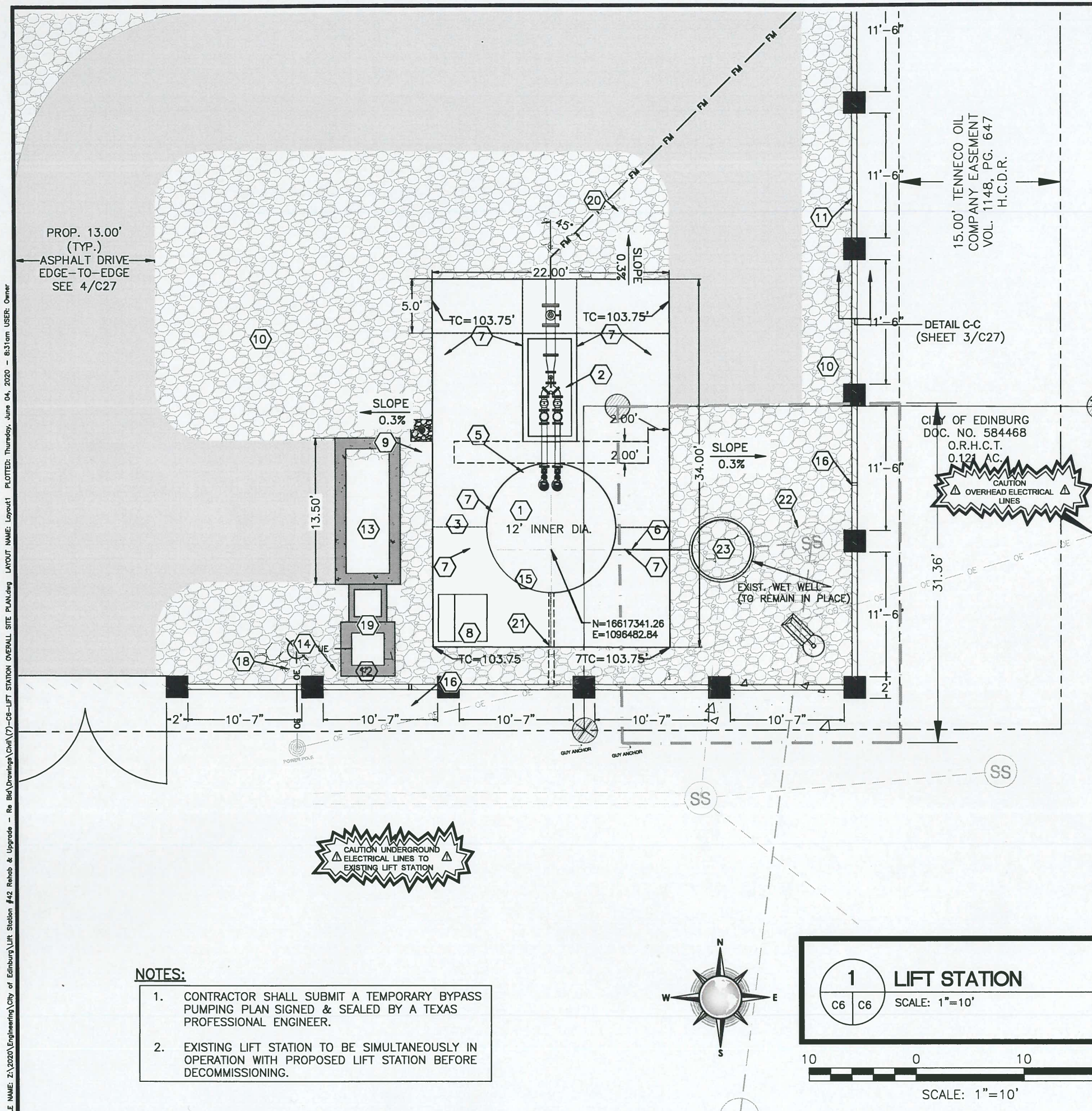

KEYED NOTES:

1. NEW FIBERGLASS 12'ø X 33' DEPTH LIFT STATION WET WELL. SEE DETAIL 1/C15 AND 1/C16. **(WET WELL PURCHASED BY CITY)**
2. NEW PRECAST 9'X5'X4' (LxWxH) VALVE VAULT(INNER DIMENSIONS). SEE DETAIL 1/C15 AND 1/C16.
3. INSTALL 6" PCC SLAB ON GRADE REINFORCED WITH #4 @16" WAY PLACED MID SLAB. SLOPE SLAB AS INDICATED FOR DRAINAGE
4. NEW 1,880' OF 10" SDR 18 PVC FORCE MAIN. INSTALL WITH 45° BENDS AS NECESSARY TO MAKE HORIZONTAL AND VERTICAL TRANSITION.
5. BOTTOM DIMENSION AND LIMITS OF THICKENED CONCRETE SLAB. SEE DETAIL 2/C16.
6. INSTALL 18 LF OF 18" SDR 26 PVC SANITARY LINE FROM EXISTING WET WELL TO NEW FIBERGLASS 12'ø X 33' DEPTH WET WELL. SEE DETAIL 5/C27. **(PVC PURCHASED BY CITY)**
7. CONSTRUCTION JOINT TYPICAL MIN. DEPTH=1/4 SLAB THICKNESS.
8. NEW CONTROL PANEL STATION. SEE SHEET C32, DETAILS 1&2. **(CONTROL PANEL PURCHASED BY CITY)**
9. NEW YARD HYDRANT.
10. 4" OF 3/4" (–) CRUSHED, WASHED GRAVEL ON PREPARED SUBGRADE AND GEOTEXTILE SEPARATION FABRIC. SEE 4/C28.
11. NEW BLOCK FENCE. SEE SHEETS C24–C27.
12. NEW PADMOUNT TRANSFORMER FOR PUMP CONTROL AND ELECTRICAL ON A 5'X5' 6" THICK REINFORCED CONCRETE SLAB. SEE 2/C28 SLAB DETAILS.
13. NEW GENERATOR ON 13.5'X6' 10" THICK REINFORCED CONCRETE SLAB. SEE DETAIL 1/C28 FOR SLAB DETAILS.
14. PROPOSED UNDERGROUND ELECTRICAL CONDUIT.
15. CONTRACTOR TO PROVIDE SHORING PLAN SIGNED AND SEALED BY TEXAS PROFESSIONAL ENGINEER. SEE SHEET C1 SECTION O.
16. WEEP HOLE. (x4)
17. FOR SECTIONS A–A, B–B, AND C–C, SEE SHEET C27.
18. PROPOSED SERVICE POLE WITH ELECTRIC METER.
19. PROPOSED AUTOMATIC TRANSFER SWITCH STATION. SEE SHEET C33.
20. INSTALL 100 LF OF 10" SDR 18 PVC FORCE MAIN LINE TO FENCE LINE. **(PVC PURCHASED BY CITY)**
21. INSTALL 6" PVC SCH 40 VENT. (SEE 3/C29)
22. EXIST. MANHOLE TO REMAIN IN PLACE
23. INSTALL RISER TO PROPOSED GRADE WITH MANHOLE COVER AND RING. (TOP OF RIM ELEV.=103.75')

NOTES:

1. CONTRACTOR SHALL SUBMIT A TEMPORARY BYPASS PUMPING PLAN SIGNED & SEALED BY A TEXAS PROFESSIONAL ENGINEER.
2. EXISTING LIFT STATION TO BE SIMULTANEOUSLY IN OPERATION WITH PROPOSED LIFT STATION BEFORE DECOMMISSIONING.

LEGEND

- PROP. LIFT STATION R.O.W.
- EXIST. LIFT STATION R.O.W.
- EXIST. ROAD R.O.W.
- EXIST. EASEMENT
- UE UE — PROP. UNDERGROUND ELECTRICAL
- EXIST. FENCE
- [FL=77.0'] — PROP. FLOWLINE

1 / C6 C6 — LIFT STATION — SCALE: 1"=10'

10 0 10 20

SCALE: 1"=10'

CONSULTANT'S SHEET
PROJECT NO. 20580-04

LUIS J. NAVA 94121 LICENSED PROFESSIONAL ENGINEER STATE OF TEXAS

INTERNATIONAL CONSULTING ENGINEERS
1723 N. GLOSNER BLVD., SUITE B
EDINBURG, TX 78541
PHONE: 956.320.8404
FAX: 361.826.8300
T.B.P.E. FIRM REGISTRATION #F-10837

THE CITY OF Edinburg
415 W. UNIVERSITY DRIVE
EDINBURG, TX 78541
PHONE: 956.388.8204
FAX: 956.383.7411

REVISION NO.	DATE	BY	DESCRIPTION

CITY OF EDINBURG
LIFT STATION 42 REHAB & UPGRADE-RE BID

LIFT STATION

DRAWING NO. C6

SHEET 7 of 36

FILE NAME: Z:\2020\Engineering\City of Edinburg\Lift Station #42 Rehab & Upgrade - Re Bid\Drawings\Civil\(7)-C6-LIFT STATION OVERALL SITE PLAN.dwg LAYOUT NAME: Layout1 PLOTTED: Thursday, June 04, 2020 - 8:31am USER: Owner

LIFT STATION #42 MATERIALS

QTY	PRODUCT / DESCRIPTION	CHECK
1	18"X18" SDR26 HW PVC GXGXG TEE	✓
1	18" SDR26 HP PVC GXG 90 ELL (Nb)	✓
1	10X6 FLXFL CONC REDUCE P401 PC	✓
1	10X6 FLG TEE P401 DI	✓
2	BRACKET, GUIDE BAR UPPER 2" 316 PART # 6136804	✓
4	6"X3'00" FLGPE P401 PIPE	✓
1	32" RING ONLY - DOMESTIC 226LB	✓
1	32" COVER ONLY - EDINBURG SEWER	✓
80 FT	6"X20' SDR26 YELOMINE PVC PIPE	✓
2	6" FLG 90 P401 LINED	✓
2	6" FLG 45 P401 LINED	✓
1	6X2 DI P401 TAPT BLIND FLANGE	✓
1	6"X6'00" FLGXFLG P401 PIPE	✓
1	6" FLG 90 P401 LINED	✓
1	10 DI C153 MJXFLG ADAPTER P401	✓
40 FT	6"X20' BE SCH40 PVC PIPE	✓
3	34"X3" HDPE MH ADJUSTING RING	✓
1	6"X6" DI C110 FLG WYE P401	✓
1	6" C110 FLANGE TEE P401 LINED	✓
112 FT	18"X14" SDR26 HW SEWER PIPE	✓
1	6" R2360-06 FLG OS&Y RW VALVE	✓
1	12"X12" SS BUG SCREEN	✓
2	6 XR501 EXTENDED RNGE COUPLING	✓
2	6" FLG PLUG VALVE	✓
4	6" SCH80 PVC LOOSE RING FLANGE	✓
1	6" DI COMP FLANGE THRD F/STEEL	✓
1	2" SS THRD BALL VALVE	✓
2	2"X3" 316 SS NIPPLE	✓
1	INFLOW PROTECTOR HDPE F/32 LID	✓
2	BUTYL MASTIC SEALANT 21' ROLL	✓
1	6" PART F MALE CAMLOC X MIPT	✓
1	6" AL PART DC CAMLOC DUSTCAP	✓
3	6" SCH40 PVC SXS 90 ELL	✓
2	10"X1/8" FFRR FLANGE GASKET	✓
19	6"X1/8" FFRR FLANGE GASKET	✓
2	10" 304SS FLG BOLT & NUT SET	✓
13	6" 304SS FLG BOLT & NUT SET	✓
6	6" 316SS FLG BOLT & NUT SET	✓
1	2" H-TEC 986 SS AIR & VACUUM	✓
1	48X24'10" FIBERGLASS MANHOLE	✓
1	48" DIA FG MH BENCH INVERT	✓
1	18" SDR26 PVC PE STUB-OUT	✓
1	18" SDR26 GSK BELL STUB-OUT	✓
2	FLYGT MODEL NP-3171.095 6" SUBMERSIBLE PUMP	✓
3	TEST FAL 2.2 PLOTTED 3170-3301	✓
2	CONNECTION, DISCH 5 1/2X6" CI	✓
2	FLG L+W CHECK VLV	✓
4	BRACKET, INT GB 2X6" 316SS+ FOR CI/DI PIPE	✓
1	HOLDER, CABLE HEAVY DUTY 316SS	✓
120	TS3162 FEET 2" GUIDE RAIL 316SS Missing one ✓ 20 ft	
1	VALVE FLUSH	✓
1	GRIP EYE UNIT	✓
2	GRIP, CABLE SS 25-36MM	✓
2	MINI-CASII/FUS 120/24VAC, 24VDC	✓
2	SOCKET, 11 PIN OCTAL DIN MOUNT	✓
4	SENSOR, ENM-10 0.95-1.1 40'	✓
1	PANEL, DUPLEX CONTROL 480/3 IN NEMA 4X ENCLOSURE	✓
1	FLYGT MODEL NP-3171. 6" SUBMERSIBLE PUMP	✓

DATE: 10/3/19

DAY: Thursday

SIGNED: [signature]

Systems Warehouse

92-Joints - 10" Sewer Pipe ✓
1-12' diameter wet well ✓
5-8'X30" Cement Pipe ✓

NOTES:

1. CONTRACTOR RESPONSIBLE FOR TRANSPORTATION OF MATERIALS ON THIS SHEET FROM ADDRESS OR NAME OF PLACE TO THE LOCATION WHERE THEY WILL BE INSTALLED.
2. CONTRACTOR TO PHYSICALLY INSPECT CONDITIONS OF MATERIAL PRIOR TO TAKING POSSESSION OF IT.
3. ALL MATERIAL NOT LISTED ON THIS PAGE SHALL BE PROVIDED BY THE CONTRACTOR.

1 / C7 | C7 MATERIALS PROVIDED BY CITY OF EDINBURG

CONSULTANT'S SHEET
PROJECT NO. 20580-04

STATE OF TEXAS · LUIS A. NAVA · 94121 · LICENSED PROFESSIONAL ENGINEER

INTERNATIONAL CONSULTING ENGINEERS
1722 N. CLOSNER BLVD., SUITE B
EDINBURG, TX. 78541
PHONE: 956.380.5404
FAX: 361.826.5800
T.B.P.E. FIRM REGISTRATION #F-10937

THE CITY OF Edinburg
415 W. UNIVERSITY DRIVE
EDINBURG, TX. 78541
PHONE: 956.388.8204
FAX: 956.383.7411

CITY OF EDINBURG
LIFT STATION 42 REHAB & UPGRADE-RE BID

MATERIALS TO BE PROVIDED BY THE CITY OF EDINBURG

DRAWING NO. C7

SHEET 8 of 36

REVISION NO.	DATE	BY	DESCRIPTION

FILE NAME: Z:\2020\Engineering\City of Edinburg\Lift Station #42 Rehab & Upgrade - Re Bid\Drawings\Civil\(8)-C7-MATERIALS BY CITY.dwg LAYOUT NAME: Layout1 PLOTTED: Thursday, June 04, 2020 - 8:31am USER: Owner

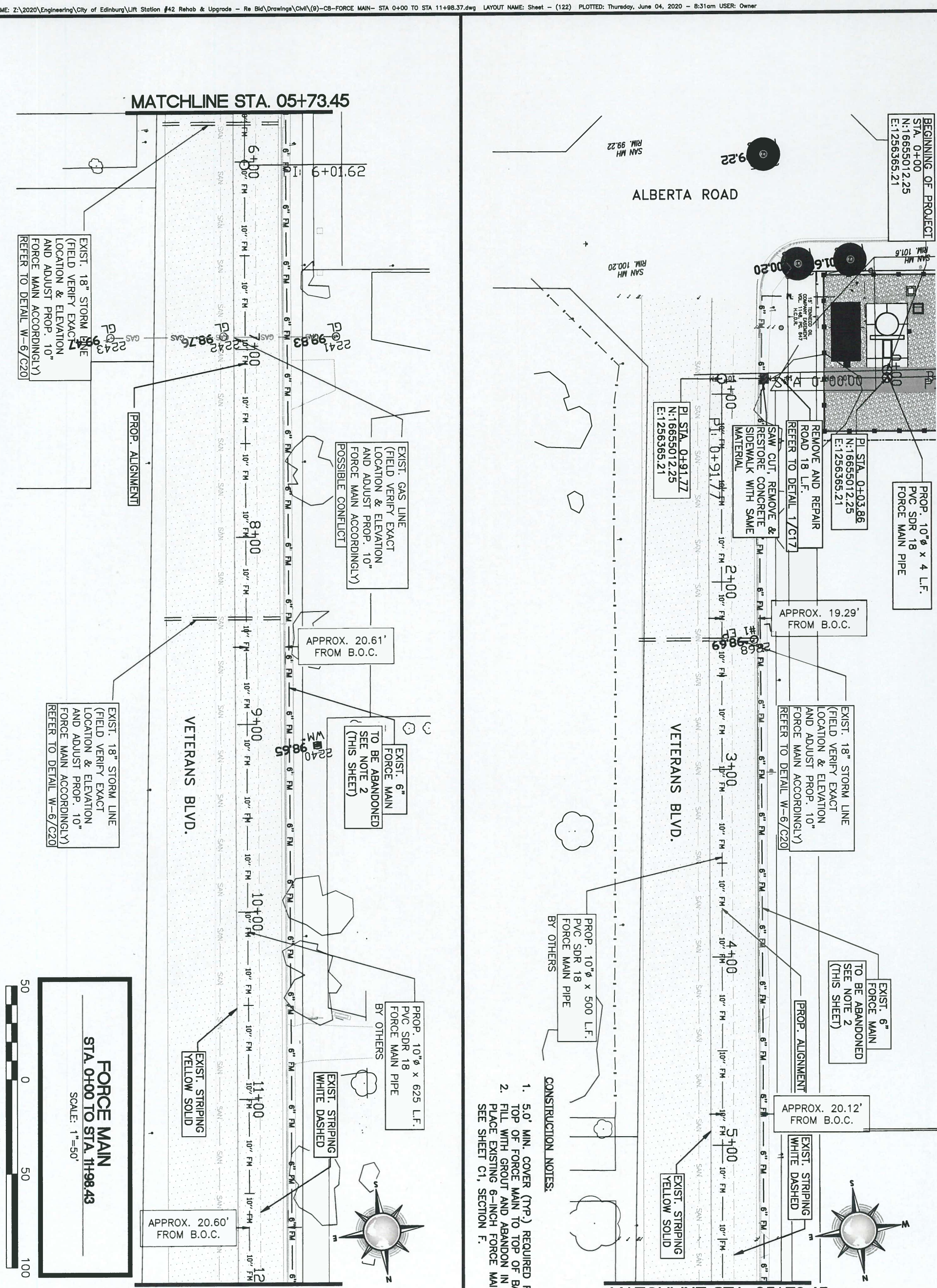

REVISION NO.	DATE	BY	DESCRIPTION

CITY OF EDINBURG
LIFT STATION 42 REHAB & UPGRADE-RE BID

FORCE MAIN IMPROVEMENTS
STA. 0+00 TO STA. 11+98.43

THE CITY OF Edinburg
PHONE: 956.388-8204
FAX: 956-383-7411
415 W. UNIVERSITY DRIVE
EDINBURG, TX 78541

ICE INTERNATIONAL CONSULTING ENGINEERS
PHONE: 956.329.5404
FAX: 361.826.5806
1722 N. CLOSNER BLVD., SUITE B
EDINBURG, TX 78541
T.B.P.E. FIRM REGISTRATION #F-10837

STATE OF TEXAS
LUIS J. NAVA
94121
LICENSED PROFESSIONAL ENGINEER
6/5/20

CONSULTANT'S SHEET
PROJECT NO. 20580-04

DRAWING NO. C8
SHEET 9 of 36

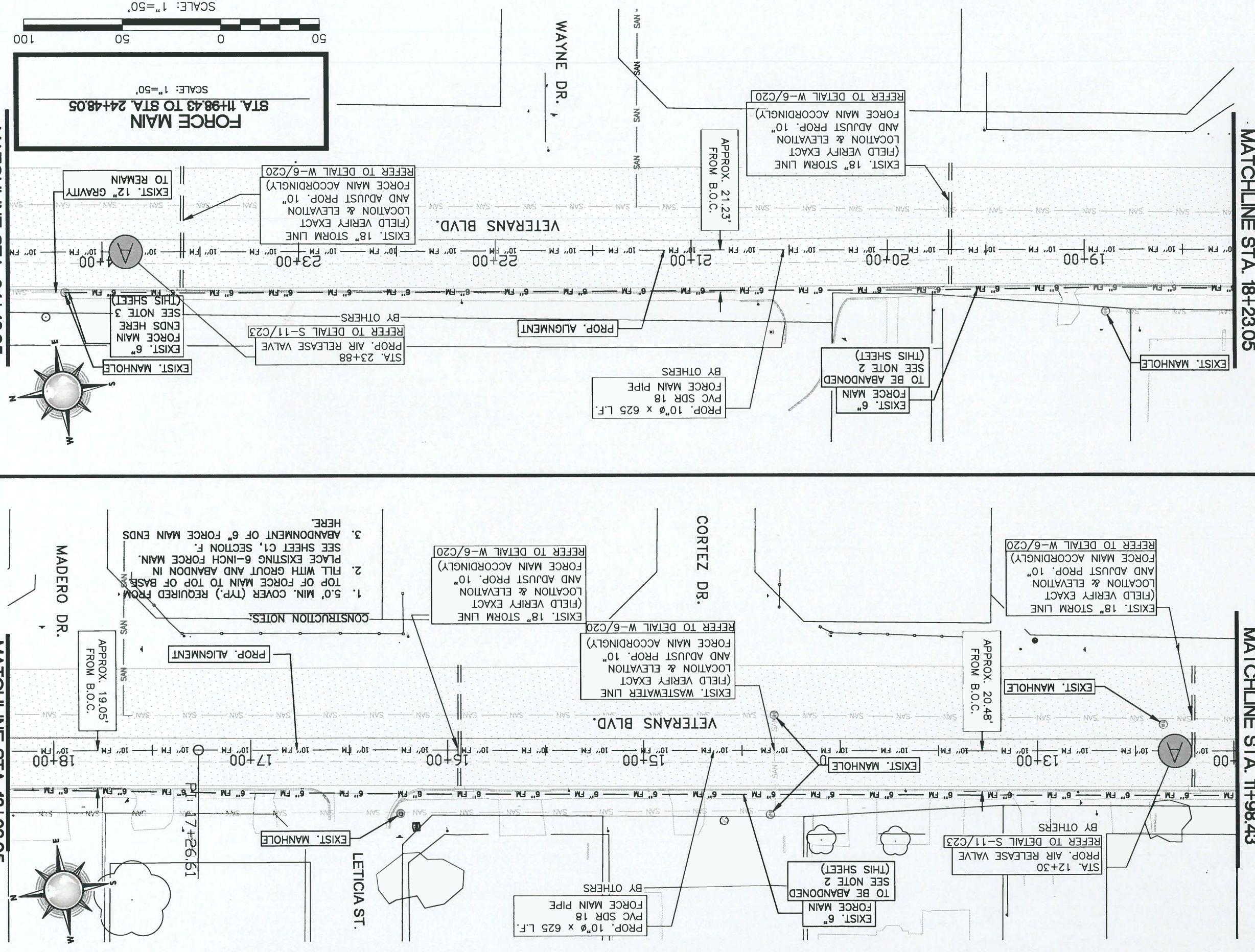

CITY OF EDINBURG
LIFT STATION 42 REHAB & UPGRADE-RE BID

FORCE MAIN IMPROVEMENTS
STA. 11+98.43 TO STA. 24+48.05

DRAWING NO. C9

SHEET 10 of 36

REVISION NO. | DATE | BY | DESCRIPTION

THE CITY OF Edinburg
413 W. UNIVERSITY DRIVE
EDINBURG, TX 78541
PHONE: 956.388.8204
FAX: 956.388.7411

INTERNATIONAL CONSULTING ENGINEERS
1722 N. CLOSNER BLVD., SUITE B
EDINBURG, TX 78541
PHONE: 956.329.8404
FAX: 956.626.8099
T.B.P.E. FIRM REGISTRATION #F - 10837

LUIS J. NAVA
94121
LICENSED PROFESSIONAL ENGINEER
STATE OF TEXAS
10/5/20

CONSULTANT'S PROJECT NO. 20580-04

FILE NAME: Z:\2020\Engineering\City of Edinburg\Lift Station #42 Rehab & Upgrade - Re Bid\Drawings\Civil\(10)-C9-FORCE MAIN- STA 11+98.37 TO STA 24+48.05.dwg LAYOUT NAME: Sheet - (123) PLOTTED: Thursday, June 04, 2020 - 8:31am USER: Owner

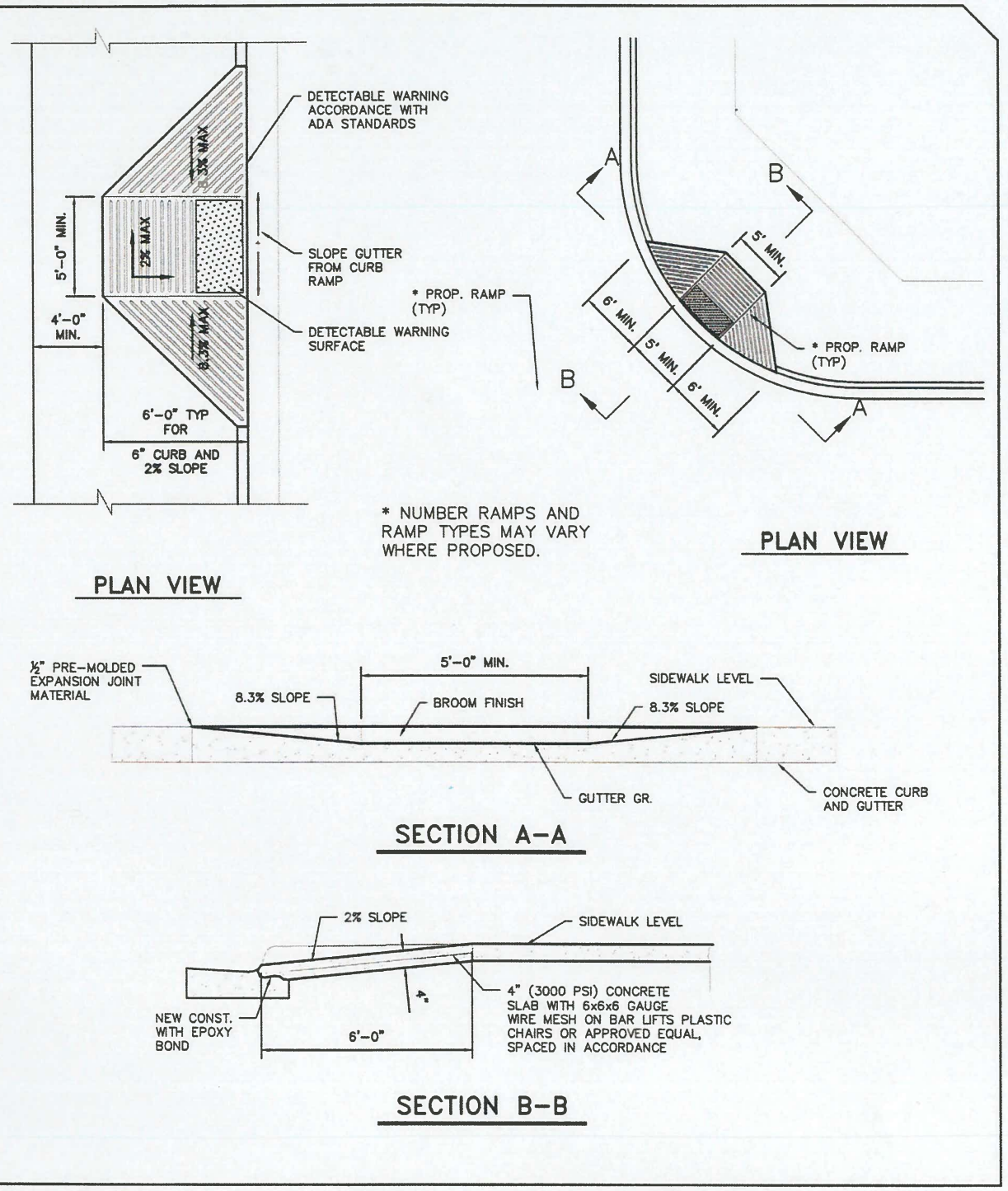

* NUMBER RAMPS AND RAMP TYPES MAY VARY WHERE PROPOSED.

PLAN VIEW

PLAN VIEW

SECTION A–A

SECTION B–B

P-11

HANDICAP RAMP DETAILS

SCALE: N.T.S.	REVISED: IP/PNL
DATE: APRIL, 2014	DRAWN BY: RMM

THE CITY OF EDINBURG
PUBLIC WORKS DEPARTMENT

Apr. 03, 2014 - 4:30PM

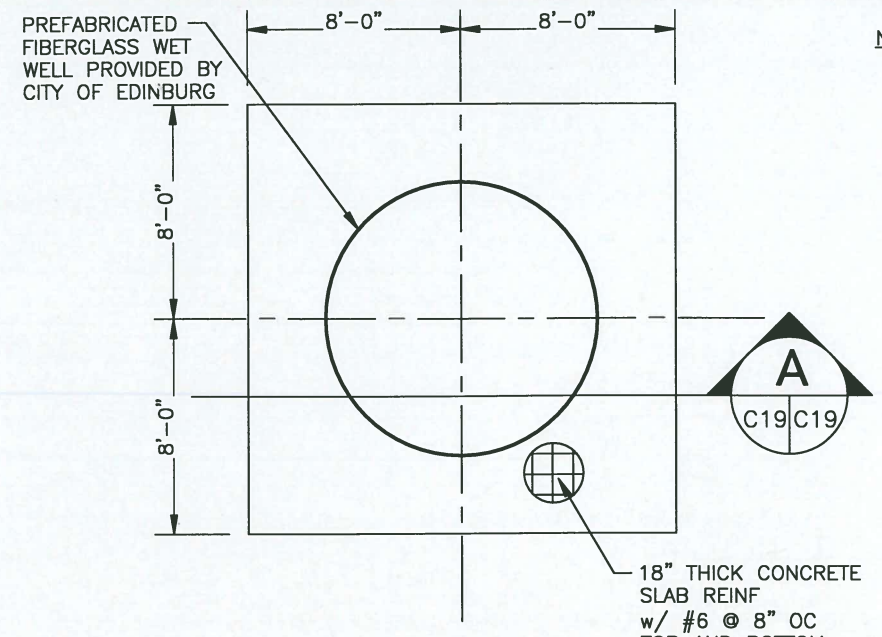

NOTES:

1. THE WET WELL IS DESIGNED TO SUPPORT THE DEAD WEIGHT OF AN 8" THICK SQUARE PAD 24" LARGER THAN THE DIAMETER OF THE WET WELL (CENTERED ON THE WET WELL) AS LONG AS THE PAD IS DESIGNED TO DISTRIBUTE THE LOADS ON THE WET WELL PERIMETER AND NOT ON THE INTERIOR OF THE LID.

1 C15 C19 **WET WELL FOUNDATION PLAN**

SCALE: N.T.S.

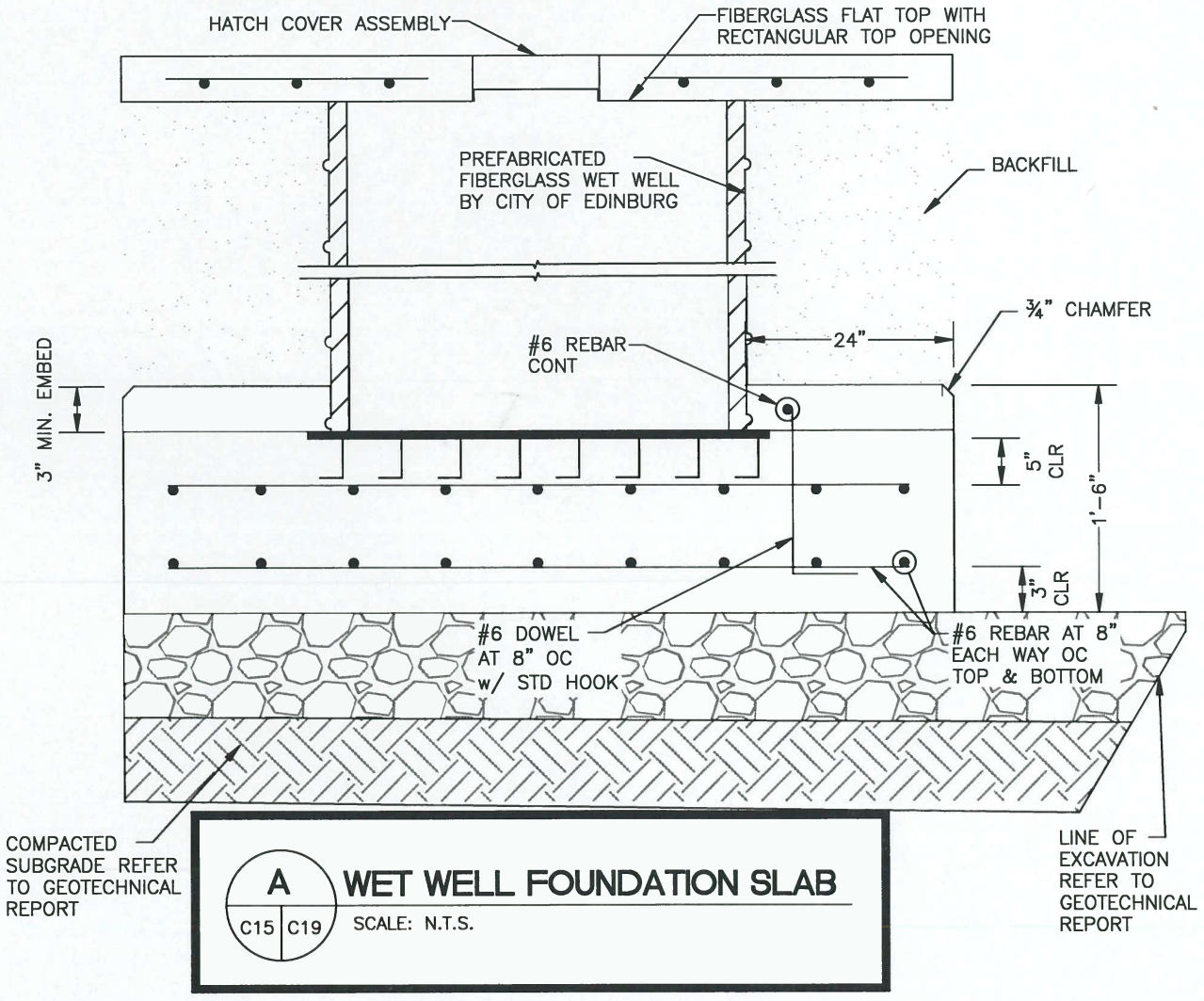

A C15 C19 **WET WELL FOUNDATION SLAB**

SCALE: N.T.S.

CONSULTANT'S SHEET
PROJECT NO. 20580-04

STATE OF TEXAS · LUIS J. NAVA · 84121 · PROFESSIONAL ENGINEER

INTERNATIONAL CONSULTING ENGINEERS
1722 N. CLOSNER BLVD., SUITE B
EDINBURG, TX 78541
PHONE: 956.329.5604
FAX: 956.383.8908
T.B.P.E. FIRM REGISTRATION #F- 10837

THE CITY OF Edinburg
415 W. UNIVERSITY DRIVE
EDINBURG, TX 78541
PHONE: 956.388-8204
FAX: 956-383-7411

CITY OF EDINBURG
LIFT STATION 42 REHAB & UPGRADE-RE BID

HANDICAP RAMP DETAILS & WET WELL FOUNDATION DETAILS

DRAWING NO. C19

SHEET 20 of 36

REVISION NO. | DATE | BY | DESCRIPTION

FILE NAME: Z:\2020\Engineering\City of Edinburg\Lift Station #42 Rehab & Upgrade - Re Bid\Drawings\Civil\(20)-C19-HANDICAP RAMP DETAILS & STORM CROSSING DETAILS.dwg LAYOUT NAME: Layout1 PLOTTED: Thursday, June 04, 2020 - 8:32am USER: Owner

MATCHLINE STA. 24+48.05

CONSTRUCTION NOTES:

1. 5.0' MIN. COVER (TYP.) REQUIRED FROM TOP OF FORCE MAIN TO TOP OF BASE.
2. FILL WITH GROUT AND ABANDON IN PLACE EXISTING 6-INCH FORCE MAIN. SEE SHEET C1, SECTION F.

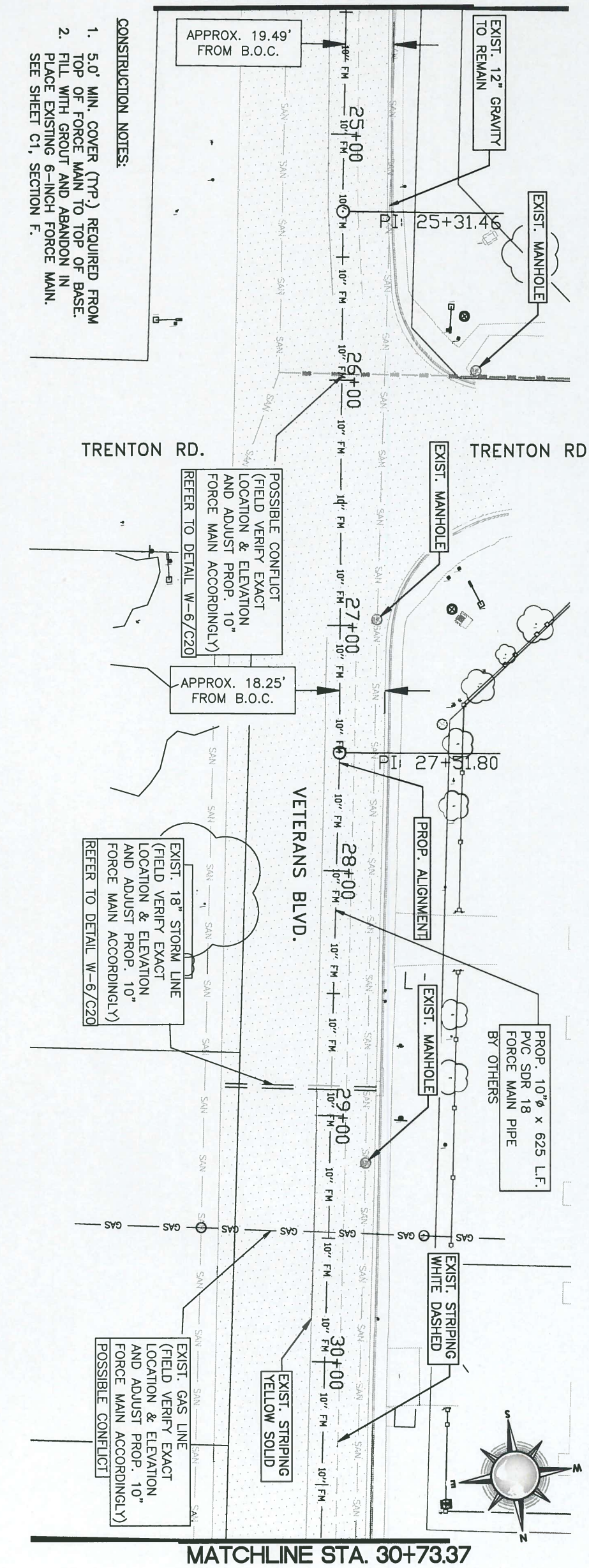

MATCHLINE STA. 30+73.37

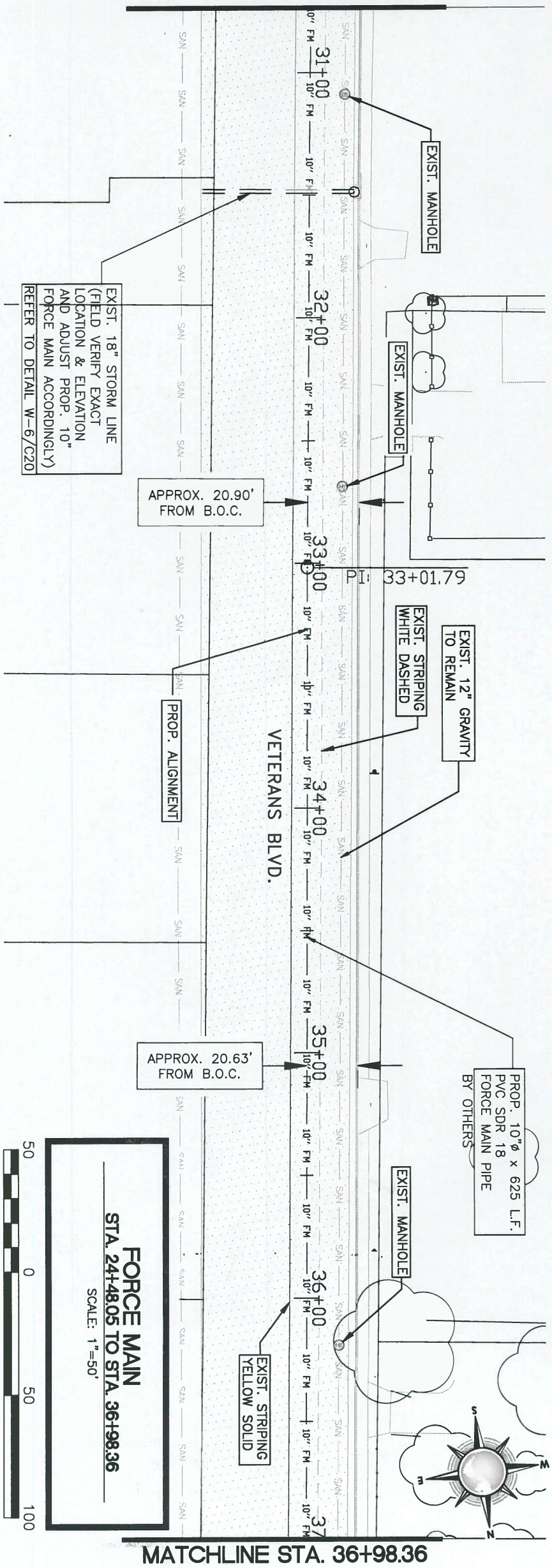

MATCHLINE STA. 36+98.36

FOR REFERENCE ONLY

SCALE: 1"=50'

0 50 100

FORCE MAIN
STA. 24+48.05 TO STA. 36+98.36

SCALE: 1"=50'

REVISION NO.	DATE	BY	DESCRIPTION

REVISION NO.	DATE	BY	DESCRIPTION

CITY OF EDINBURG
LIFT STATION 42 REHAB & UPGRADE-RE BID

FORCE MAIN IMPROVEMENTS
STA. 24+48.05 TO STA. 36+98.36

DRAWING NO. C10
SHEET 11 of 36

THE CITY OF Edinburg
PHONE: 956.388-8204
FAX: 956-383-7411
415 W. UNIVERSITY DRIVE
EDINBURG, TX 78541

ICE
INTERNATIONAL CONSULTING ENGINEERS
PHONE: 956.329.5404
FAX: 361.826.5906
1722 N. CLOSNER BLVD., SUITE B
EDINBURG, TX 78541
T.B.P.E. FIRM REGISTRATION #F - 10837

STATE OF TEXAS
LUIS J. NAVA
94121
LICENSED PROFESSIONAL ENGINEER
6/5/20

CONSULTANT'S SHEET
PROJECT NO. 20580-04

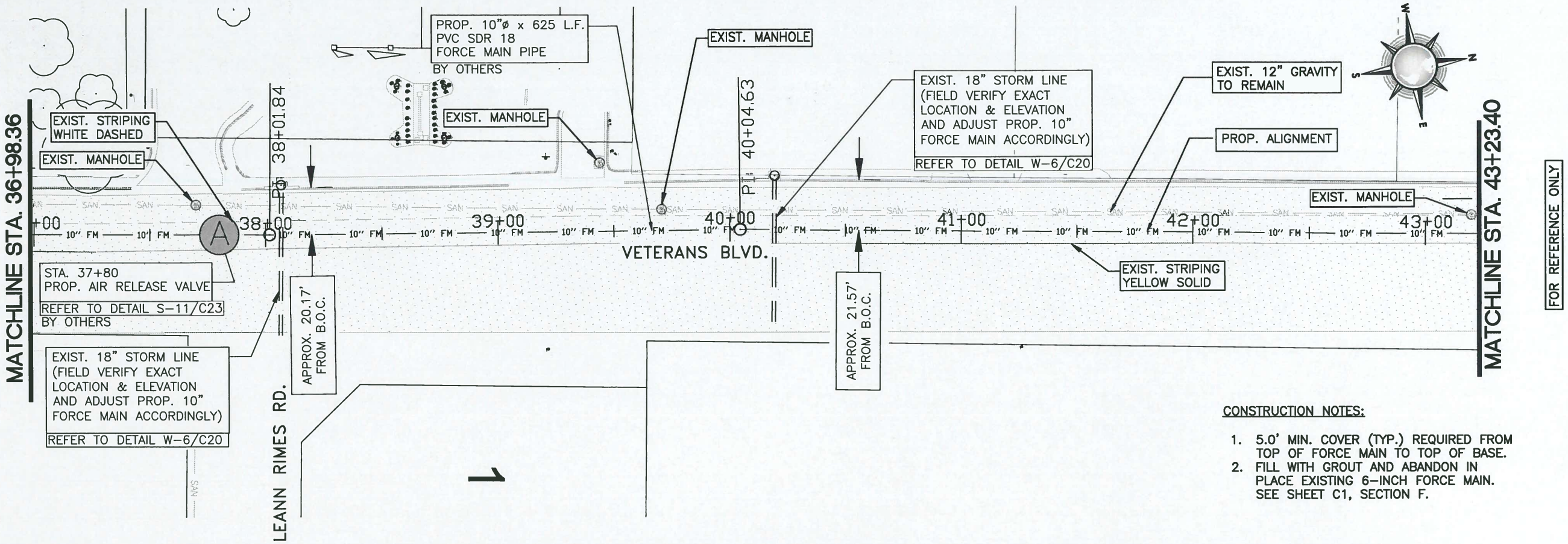

FOR REFERENCE ONLY

CONSTRUCTION NOTES:

1. 5.0' MIN. COVER (TYP.) REQUIRED FROM TOP OF FORCE MAIN TO TOP OF BASE.
2. FILL WITH GROUT AND ABANDON IN PLACE EXISTING 6-INCH FORCE MAIN. SEE SHEET C1, SECTION F.

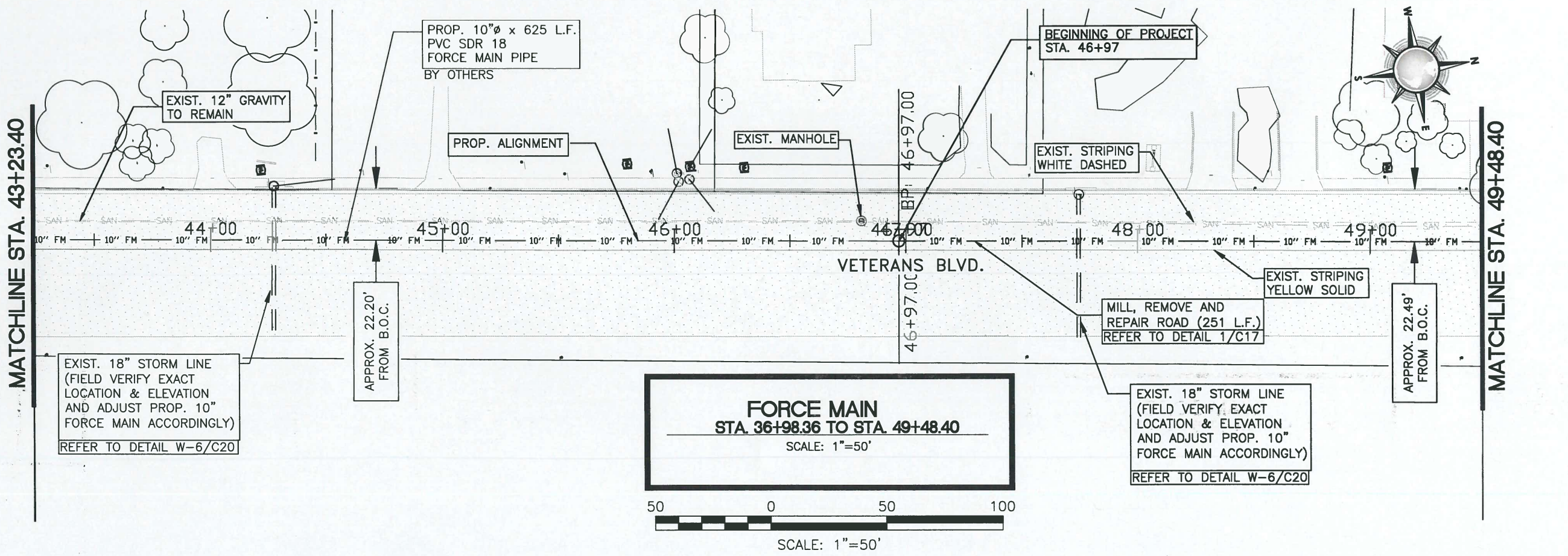

FORCE MAIN
STA. 36+98.36 TO STA. 49+48.40
SCALE: 1"=50'

50 0 50 100
SCALE: 1"=50'

CONSULTANT'S SHEET
PROJECT NO. 20580-04

STATE OF TEXAS
LUIS J. NAVY
94121
LICENSED PROFESSIONAL ENGINEER
6/5/20

ICE
INTERNATIONAL CONSULTING ENGINEERS
PHONE: 956.329.8404
FAX: 361.826.5806
1722 N. CLOSNER BLVD., SUITE B
EDINBURG, TX 78541
T.B.P.E. FIRM REGISTRATION #F-10837

THE CITY OF Edinburg
415 W. UNIVERSITY DRIVE
EDINBURG, TX 78541
PHONE: 956.388-8204
FAX: 956-383-7411

CITY OF EDINBURG
LIFT STATION 42 REHAB & UPGRADE-RE BID

FORCE MAIN IMPROVEMENTS
STA. 36+98.36 TO STA. 49+48.40

DRAWING NO.
C11

SHEET 12 of 36

REVISION NO. | DATE | BY | DESCRIPTION

FILE NAME: Z:\2020\Engineering\City of Edinburg\Lift Station #42 Rehab & Upgrade - Re Bid\Drawings\Civil\(12)-C11-FORCE MAIN- STA 36+98.36 TO STA 49+48.40.dwg LAYOUT NAME: Sheet - (125) PLOTTED: Thursday, June 04, 2020 - 8:32am USER: Owner

MATCHLINE STA. 49+48.40

EXIST. MANHOLE

50+00

PI: 50+16.30

APPROX. 22.50' FROM B.O.C.

EXIST. 18" STORM LINE (FIELD VERIFY EXACT LOCATION & ELEVATION AND ADJUST PROP. 10" FORCE MAIN ACCORDINGLY) REFER TO DETAIL W-6/C20

EXIST. STRIPING WHITE DASHED

51+00

52+00

PROP. ALIGNMENT

WISCONSIN RD.

EXIST. MANHOLE

VETERANS BLVD.

53+00

PROP. 10"ø x 625 L.F. PVC SDR 18 FORCE MAIN PIPE

EXIST. MANHOLE

PI: 53+88.20

54+00

EXIST. SANITARY SEWER LINE (FIELD VERIFY EXACT LOCATION & ELEVATION AND ADJUST PROP. 10" FORCE MAIN ACCORDINGLY) POSSIBLE CONFLICT

EXIST. STRIPING YELLOW SOLID

MILL, REMOVE AND REPAIR ROAD (625 L.F.) REFER TO DETAIL 1/C17

EXIST. 12" GRAVITY TO REMAIN

55+00

APPROX. 21.33' FROM B.O.C.

CONSTRUCTION NOTES:

1. 5.0' MIN. COVER (TYP.) REQUIRED FROM TOP OF FORCE MAIN TO TOP OF BASE.
2. FILL WITH GROUT AND ABANDON IN PLACE EXISTING 6-INCH FORCE MAIN. SEE SHEET C1, SECTION F.

MATCHLINE STA. 55+73.46

MATCHLINE STA. 55+73.46

EXIST. 18" STORM LINE (FIELD VERIFY EXACT LOCATION & ELEVATION AND ADJUST PROP. 10" FORCE MAIN ACCORDINGLY) REFER TO DETAIL W-6/C20

56+00

PI: 56+35.81

STA. 56+15 PROP. AIR RELEASE VALVE REFER TO DETAIL S-11/C23

EXIST. STRIPING WHITE DASHED

57+00

PROP. ALIGNMENT

APPROX. 19.10' FROM B.O.C.

58+00

PROP. 10"ø x 625 L.F. PVC SDR 18 FORCE MAIN PIPE

EXIST. 12" GRAVITY TO REMAIN

59+00

PI: 59+56.39

VETERANS BLVD.

MILL, REMOVE AND REPAIR ROAD (625 L.F.) REFER TO DETAIL 1/C17

60+00

APPROX. 18.27' FROM B.O.C.

EXIST. 18" STORM LINE (FIELD VERIFY EXACT LOCATION & ELEVATION AND ADJUST PROP. 10" FORCE MAIN ACCORDINGLY) REFER TO DETAIL W-6/C20

PI: 60+83.80

61+00

EXIST. STRIPING YELLOW SOLID

APPROX. 18.21' FROM B.O.C.

MATCHLINE STA. 61+95.75

FORCE MAIN
STA. 49+48.40 TO STA. 61+95.75

SCALE: 1"=50'

50 0 50 100

SCALE: 1"=50'

REVISION NO.	DATE	BY	DESCRIPTION

REVISION NO.	DATE	BY	DESCRIPTION

CITY OF EDINBURG
LIFT STATION 42 REHAB & UPGRADE-RE BID

FORCE MAIN IMPROVEMENTS
STA. 49+48.40 TO STA. 61+95.75

DRAWING NO. C12

SHEET 13 of 36

THE CITY OF Edinburg
PHONE: 956.388-8204
FAX: 956-383-7411
415 W. UNIVERSITY DRIVE
EDINBURG, TX 78541

ICE INTERNATIONAL CONSULTING ENGINEERS
PHONE: 956.329.5404
FAX: 361.826.5806
1722 N. CLOSNER BLVD., SUITE B
EDINBURG, TX 78541
T.B.P.E. FIRM REGISTRATION #F - 10837

STATE OF TEXAS
LUIS J. NAVA
94121
LICENSED PROFESSIONAL ENGINEER
6/5/20

CONSULTANT'S SHEET PROJECT NO. 20580-04

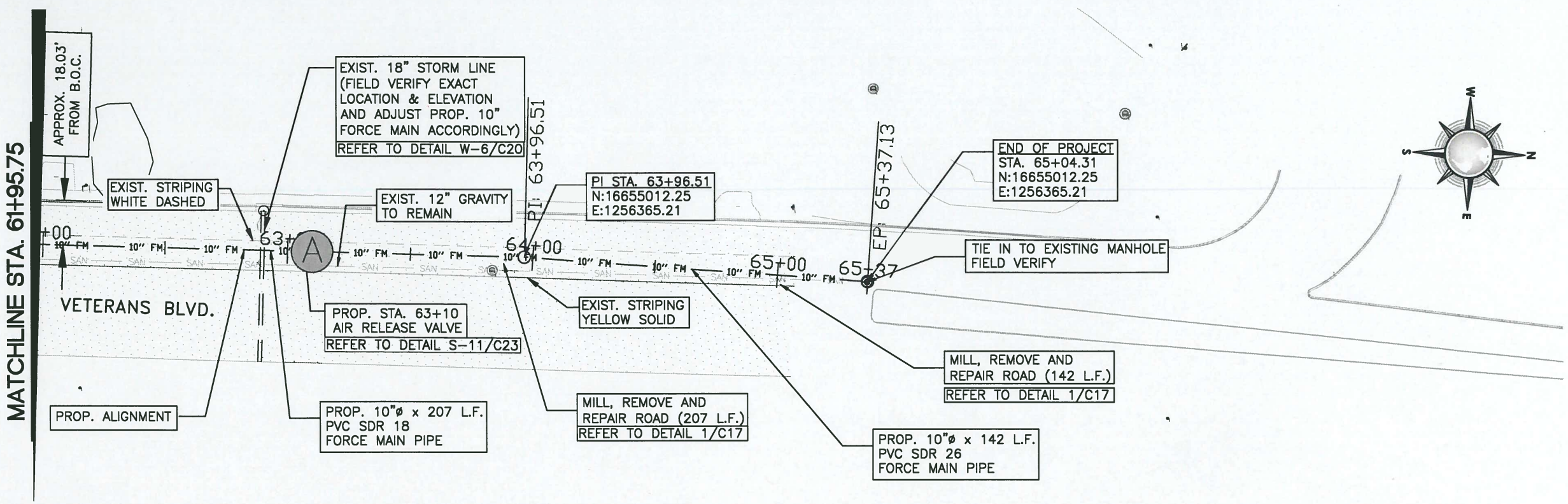

CONSTRUCTION NOTES:

1. 5.0' MIN. COVER (TYP.) REQUIRED FROM TOP OF FORCE MAIN TO TOP OF BASE.
2. FILL WITH GROUT AND ABANDON IN PLACE EXISTING 6-INCH FORCE MAIN. SEE SHEET C1, SECTION F.

FORCE MAIN
STA. 61+95.75 TO STA. 65+37.13
SCALE: 1"=50'

50 0 50 100
SCALE: 1"=50'

CONSULTANT'S SHEET
PROJECT NO. 20580-04

STATE OF TEXAS
LUIS J. NAVA
94121
LICENSED
PROFESSIONAL ENGINEER
6/5/20

ICE
INTERNATIONAL CONSULTING ENGINEERS
PHONE: 956.329.5404
FAX: 361.826.5806
1722 N. CLOSNER BLVD., SUITE B
EDINBURG, TX 78541
T.B.P.E. FIRM REGISTRATION #F-10837

THE CITY OF Edinburg
415 W. UNIVERSITY DRIVE
EDINBURG, TX 78541
PHONE: 956.388.8204
FAX: 956.383.7411

CITY OF EDINBURG
LIFT STATION 42 REHAB & UPGRADE-RE BID

FORCE MAIN IMPROVEMENTS
STA. 61+95.75 TO 65+37.13

DRAWING NO.
C13

SHEET 14 of 36

REVISION NO.	DATE	BY	DESCRIPTION

FILE NAME: Z:\2020\Engineering\City of Edinburg\Lift Station #42 Rehab & Upgrade - Re Bid\Drawings\Civil\(14)-C13-FORCE MAIN- STA 61+95.75 TO STA 65+37.13.dwg LAYOUT NAME: Sheet - (127) PLOTTED: Thursday, June 04, 2020 - 8:32am USER: Owner

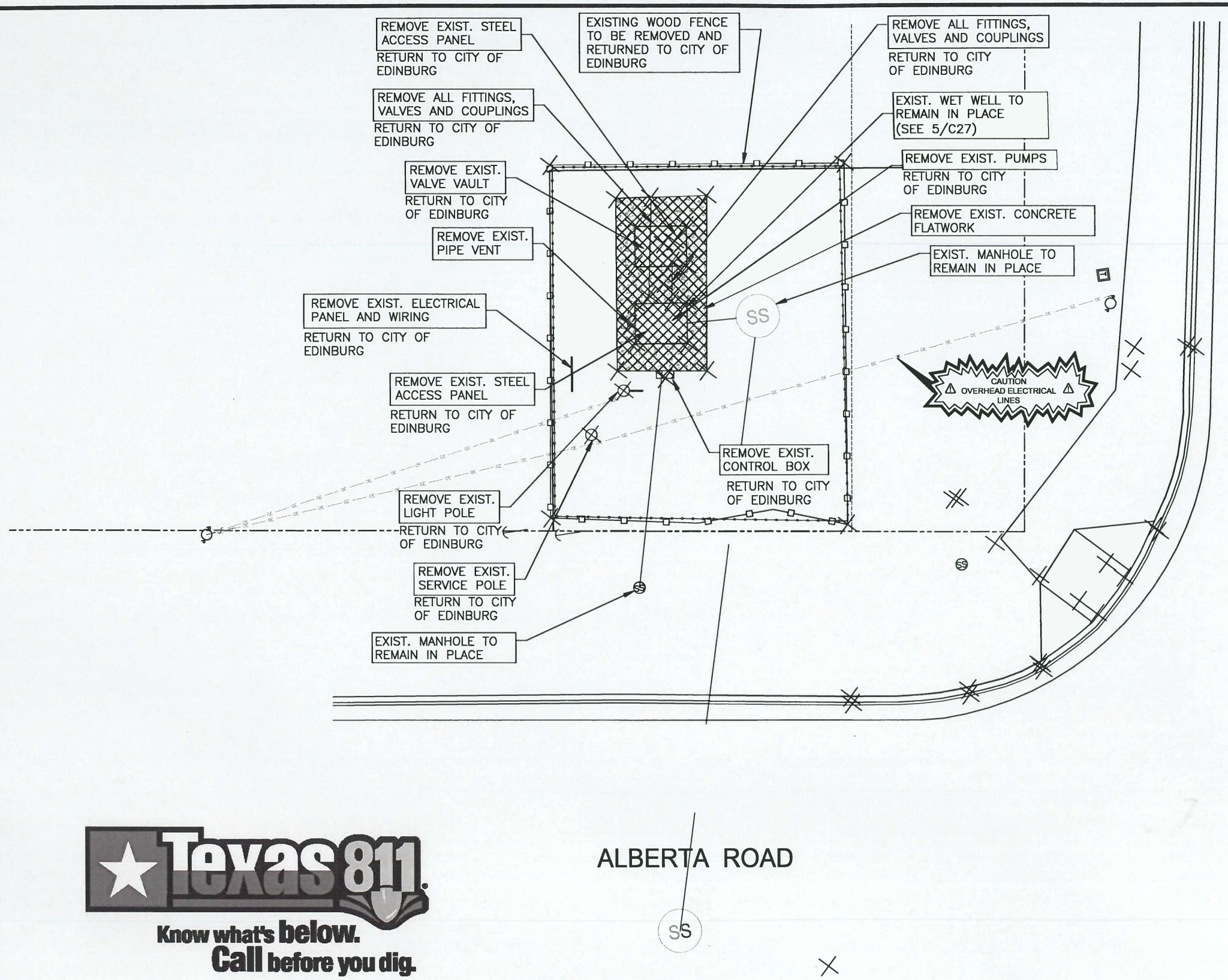

S VETERNAS BLVD

N
W E
S

DEMOLITION NOTES:

1. ALL DEMOLISHED MATERIAL SHALL BECOME THE PROPERTY OF THE CONTRACTOR, SHALL BE PROMPTLY REMOVED FROM THE SITE AND PROPERLY DISPOSED, UNLESS NOTED OTHERWISE ON THE DRAWINGS.
2. CONTRACTOR SHALL PROPERLY REPAIR ANY DAMAGE TO THE CONCRETE STRUCTURE LEFT BY DEMOLITION, SUBMIT TO THE ENGINEER THE METHOD AND MATERIAL USED FOR APPROVAL.
3. CONTRACTOR SHALL BE RESPONSIBLE FOR PROTECTION AND SAFETY OF THE WORK, WORKERS, SUBCONTRACTORS, MATERIALS, AND EQUIPMENT.
4. CONTRACTOR SHALL TAKE SPECIAL CARE IN NOT TO TRESPASS ON OR DAMAGE PRIVATE PROPERTY.
5. CONTRACTOR TO PROVIDE EROSION CONTROL MEASURES, AS NEEDED. PROTECT EXISTING STREETS AND INLETS WITH SILT FENCE AND EROSION CONTROL LOGS.

Texas 811
Know what's below. Call before you dig.

1 C14 C14 DEMOLITION PLAN
SCALE: 1"=10'

10 0 10 20
SCALE: 1"=10'

LEGEND
TO BE DEMOLISHED

CONSULTANT'S SHEET
PROJECT NO. 20580-04

STATE OF TEXAS
LUIS J. NAVA
94121
LICENSED PROFESSIONAL ENGINEER
6/5/20

IOE
INTERNATIONAL CONSULTING ENGINEERS
PHONE: 956.329.5404
FAX: 361.826.5806
1722 N. CLOSNER BLVD., SUITE B
EDINBURG, TX 78541
T.B.P.E. FIRM REGISTRATION #F-10837

THE CITY OF Edinburg
415 W. UNIVERSITY DRIVE
EDINBURG, TX 78541
PHONE: 956.383-6204
FAX: 956-383-7411

CITY OF EDINBURG
LIFT STATION 42 REHAB & UPGRADE-RE BID

LIFT STATION DEMOLITION PLAN

DRAWING NO.
C14
SHEET 15 of 36

REVISION NO. | DATE | BY | DESCRIPTION

FILE NAME: Z:\2020\Engineering\City of Edinburg\Lift Station #42 Rehab & Upgrade - Re Bid\Drawings\Civil\(15)-C14-LIFT STATION SITE DEMOLITION.dwg LAYOUT NAME: Layout1 PLOTTED: Thursday, June 04, 2020 - 8:32am USER: Owner

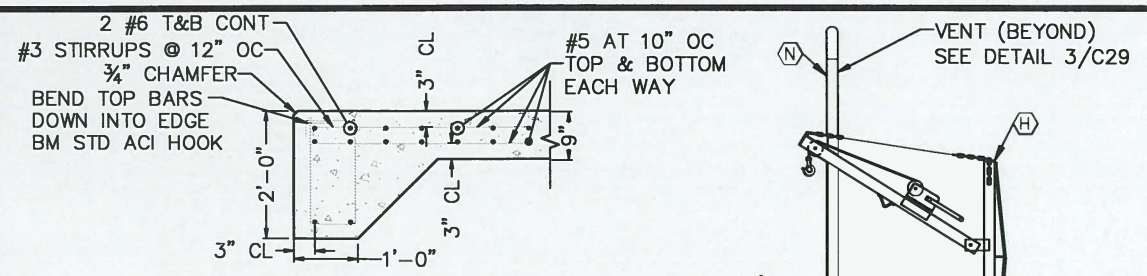

A TYPICAL TOP SLAB SECTION
C15 C15 SCALE: N.T.S.

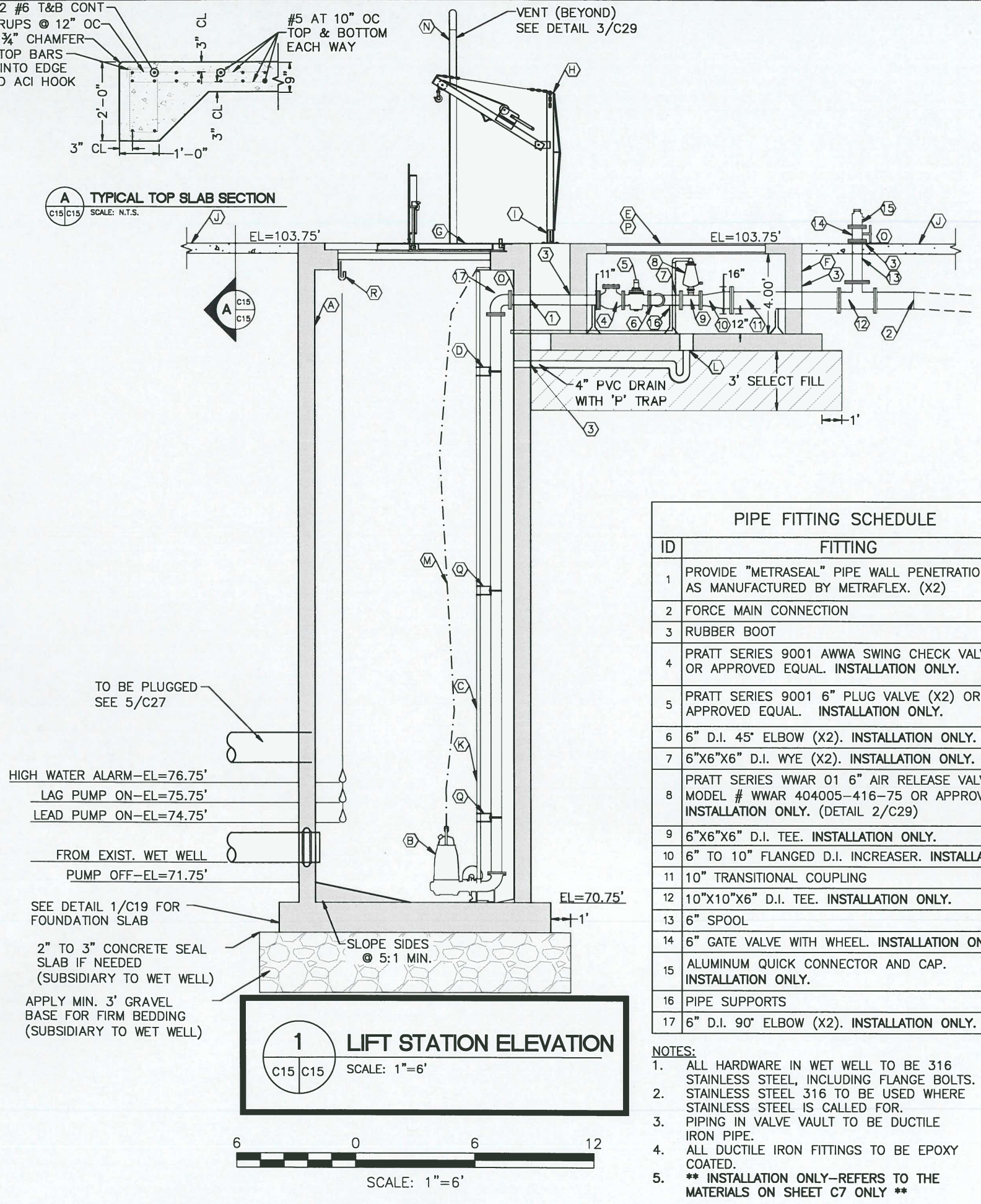

1 LIFT STATION ELEVATION
C15 C15 SCALE: 1"=6'

6 0 6 12
SCALE: 1"=6'

PIPE FITTING SCHEDULE	
ID	FITTING
1	PROVIDE "METRASEAL" PIPE WALL PENETRATION SEAL AS MANUFACTURED BY METRAFLEX. (X2)
2	FORCE MAIN CONNECTION
3	RUBBER BOOT
4	PRATT SERIES 9001 AWWA SWING CHECK VALVE (X2) OR APPROVED EQUAL. **INSTALLATION ONLY.**
5	PRATT SERIES 9001 6" PLUG VALVE (X2) OR APPROVED EQUAL. **INSTALLATION ONLY.**
6	6" D.I. 45° ELBOW (X2). **INSTALLATION ONLY.**
7	6"X6"X6" D.I. WYE (X2). **INSTALLATION ONLY.**
8	PRATT SERIES WWAR 01 6" AIR RELEASE VALVE MODEL # WWAR 404005-416-75 OR APPROVED EQUAL. **INSTALLATION ONLY.** (DETAIL 2/C29)
9	6"X6"X6" D.I. TEE. **INSTALLATION ONLY.**
10	6" TO 10" FLANGED D.I. INCREASER. **INSTALLATION ONLY.**
11	10" TRANSITIONAL COUPLING
12	10"X10"X6" D.I. TEE. **INSTALLATION ONLY.**
13	6" SPOOL
14	6" GATE VALVE WITH WHEEL. **INSTALLATION ONLY.**
15	ALUMINUM QUICK CONNECTOR AND CAP. **INSTALLATION ONLY.**
16	PIPE SUPPORTS
17	6" D.I. 90° ELBOW (X2). **INSTALLATION ONLY.**

NOTES:
1. ALL HARDWARE IN WET WELL TO BE 316 STAINLESS STEEL, INCLUDING FLANGE BOLTS.
2. STAINLESS STEEL 316 TO BE USED WHERE STAINLESS STEEL IS CALLED FOR.
3. PIPING IN VALVE VAULT TO BE DUCTILE IRON PIPE.
4. ALL DUCTILE IRON FITTINGS TO BE EPOXY COATED.
5. **** INSTALLATION ONLY-REFERS TO THE MATERIALS ON SHEET C7 ONLY ****

	LIFT STATION FEATURES
ID	FEATURE
A	NEW FIBERGLASS 12'ø X 33' DEPTH LIFT STATION WET WELL. SEE DETAIL 1/C15 AND 1/C16. **INSTALLATION ONLY**
B	SUBMERSIBLE PUMP (X2) – SEE PUMP SHCEDULE **INSTALLATION ONLY**
C	STAINLESS STEEL DOUBLE GUIDE RAILS AND HARDWARE (X2) **INSTALLATION ONLY (MISSING 20 L.F. SEE SHEET C7)**
D	STAINLESS STEEL INTERMEDIATE RAIL SUPPORT AND HARDWARE (X4) **INSTALLATION ONLY**
E	HALLIDAY SERIES S2S ACCESS DOOR MODEL S2S7260 72"X60". CONTRACTOR TO ACCOMMODATE DOOR WITH EITHER A PRECAST LID OR OTHER APPROVED MEANS.
F	PRECAST 9'X7'X4' (LXWXH) VALVE VAULT (INNER DIMENSIONS)
G	HALLIDAY SERIES R1R ACCESS DOOR MODEL R1R72. WITH PROTECTIVE GRATING PANEL (SERIES X RETRO-GRATE).
H	HALLIDAY SERIES DB PORTABLE HOIST (D2B36D). STANDARD FEATURES WITH STAINLESS STEEL WINCH ASSEMBLY AND HOOK.
I	HALLIDAY SERIES D STAINLESS STEEL HOIST, FLOOR STYLE, MODEL # D2S LINED
J	9" REINFORCED PORTLAND CEMENT CONCRETE ON A 6" CRUSHED BASE COURSE OVER PROPERLY PREPARED SUBGRADE.
K	STAINLESS STEEL LIFT OUT ASSEMBLY (X2) **INSTALLATION ONLY**
L	NEENAH FOUNDRY R-4370-1 6-3/8" DRAINAGE GRATE TYPE C FLOOR DRAIN W/4" PVC & P TRAP, CONNECT TO LIFT STATION
M	STAINLESS STEEL LIFT OUT CABLE (50 FEET)
N	6" PVC SCH 40 VENT PIPE W/ #24 STAINLESS STEEL SCREEN TO BE REMOVABLE FOR CLEANING AND REPLACEMENT. **INSTALLATION ONLY**
O	CONTRACTOR TO VERIFY PIPING DIMENSIONS SUCH THAT THE FLANGE IS AS CLOSE TO THE WALL AS POSSIBLE, BUT STILL ACCESSIBLE TO CONNECT OR DISCONNECT FLANGE
P	CONTRACTOR TO SUBMIT DRAWING FOR 6' ACCESS COVER IN 7' OPENING.
Q	STAINLESS STEEL INTERMEDIATE RAIL SUPPORT AND HARDWARE (X4)
R	HEAVY DUTY CABLE HOLDER 316 SS

PUMP SHCEDULE	
ITEM	REQUIREMENT
MODEL	FLYGT NP 3171 MT 3 ~ 435 (EXPLOSION PROOF) OR APPROVED EQUAL
TYPE	SUBMERSIBLE, SELF CLEANING
QUANTITY	2 (+1 SPARE)
DUTY PT 1	1494 G.P.M. @ 51.1' TDH
DUTY PT 2	1494 G.P.M. @ 51.1' TDH
SPEED	1,765 RPM
VOLTS	460
HZ	60
PHASE	3~
DISCHARGE	5 ⅞"
IMPELLER	9 ⅝"
HP	30
AMPS	38

CONSULTANT'S SHEET
PROJECT NO. 20580-04

STATE OF TEXAS · LUIS J. NAVA · 94121 · LICENSED PROFESSIONAL ENGINEER

INTERNATIONAL CONSULTING ENGINEERS
1722 N. CLOSNER BLVD., SUITE B
EDINBURG, TX 78541
PHONE: 956.383.5404
FAX: 361.826.8008
T.B.P.E. FIRM REGISTRATION #F-10837

THE CITY OF Edinburg
415 W. UNIVERSITY DRIVE
EDINBURG, TX 78541
PHONE: 956.388.8204
FAX: 956.383.7411

REVISION NO.	DATE	BY	DESCRIPTION

CITY OF EDINBURG
LIFT STATION 42 REHAB & UPGRADE-RE BID

LIFT STATION DETAILS

DRAWING NO. C15

SHEET 16 of 36

FILE NAME: Z:\2020\Engineering\City of Edinburg\LIft Station #42 Rehab & Upgrade - Re Bid\Drawings\Civil\(16)-C15-LIFT STATION DETAILS.dwg LAYOUT NAME: Layout1 PLOTTED: Thursday, June 04, 2020 - 8:19am USER: Owner

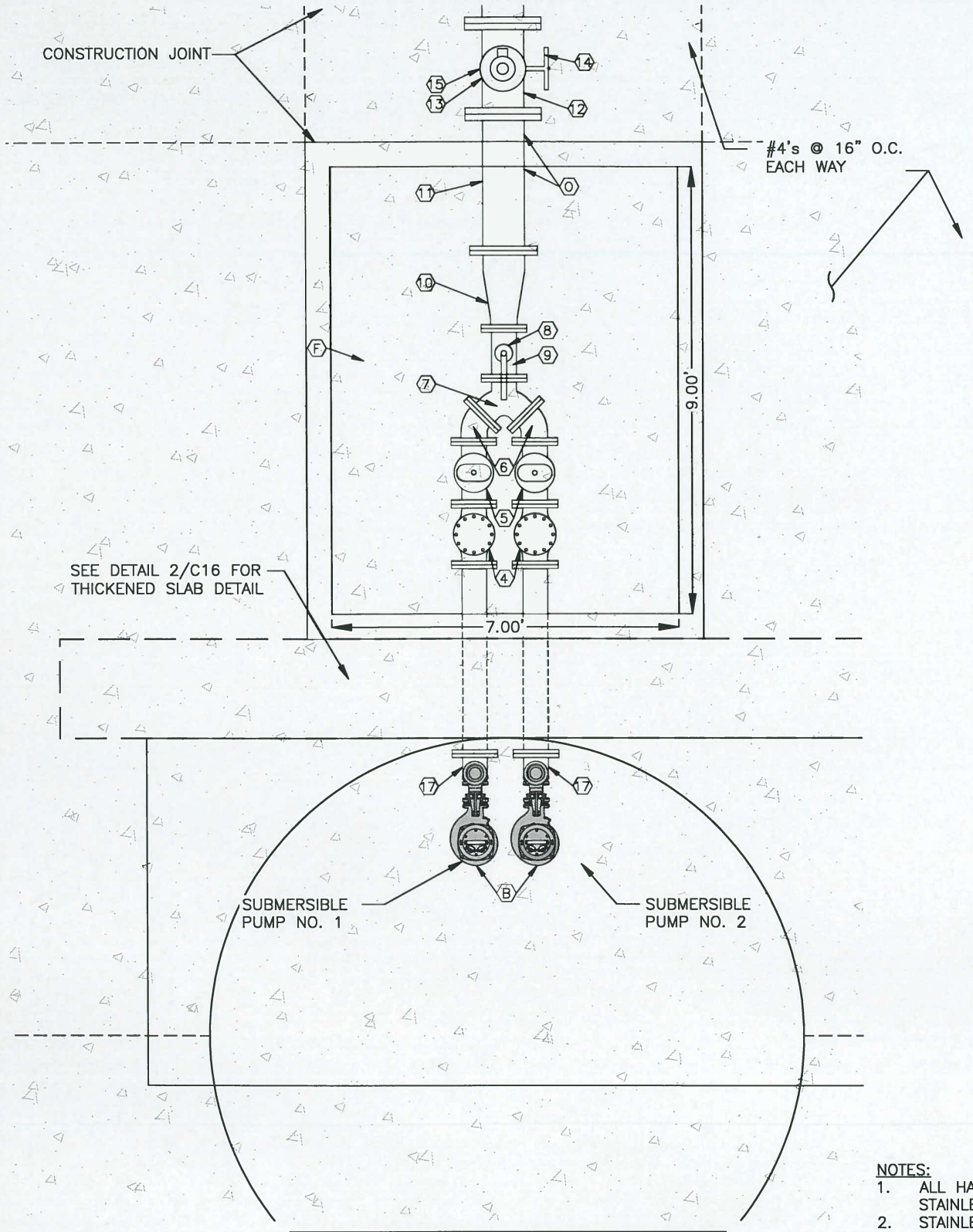

1 LIFT STATION PLAN
C16 | C16
SCALE: 1"=3'

3 0 3 6
SCALE: 1"=3'

PUMP SHCEDULE	
ITEM	REQUIREMENT
MODEL	FLYGT NP 3171 MT 3 ~ 435 (EXPLOSION PROOF) OR APPROVED EQUAL
TYPE	SUBMERSIBLE, SELF CLEANING
QUANTITY	2 (+1 SPARE)
DUTY PT 1	1494 G.P.M. @ 51.1' TDH
DUTY PT 2	1494 G.P.M. @ 51.1' TDH
SPEED	1,765 RPM
VOLTS	460
HZ	60
PHASE	3~
DISCHARGE	5 7/8"
IMPELLER	9 5/8"
HP	30
AMPS	38

PIPE FITTING SCHEDULE	
ID	FITTING
1	PROVIDE "METRASEAL" PIPE WALL PENETRATION SEAL AS MANUFACTURED BY METRAFLEX. (X2)
2	EXISTING FORCE MAIN CONNECTION
3	RUBBER BOOT
4	PRATT SERIES 9001 AWWA SWING CHECK VALVE (X2) OR APPROVED EQUAL. **INSTALLATION ONLY.**
5	PRATT SERIES 9001 6" PLUG VALVE (X2) OR APPROVED EQUAL. **INSTALLATION ONLY.**
6	6" D.I. 45° ELBOW (X2). **INSTALLATION ONLY.**
7	6"X6"X6" WYE. **INSTALLATION ONLY.**
8	PRATT SERIES WWAR 01 6" AIR RELEASE VALVE MODEL # WWAR 404005-416-75 OR APPROVED EQUAL. **INSTALLATION ONLY.**
9	6"X6"X6" D.I. TEE. **INSTALLATION ONLY.**
10	6" TO 10" FLANGED D.I. INCREASER. **INSTALLATION ONLY.**
11	10" TRANSITIONAL COUPLING
12	10"X10"X6" D.I. TEE. **INSTALLATION ONLY.**
13	6" SPOOL

	LIFT STATION FEATURES
ID	FEATURE
A	NEW FIBERGLASS 12'ø X 33' DEPTH LIFT STATION WET WELL. SEE DETAIL 1/C15 AND 1/C16. **INSTALLATION ONLY.**
B	SUBMERSIBLE PUMP (X2) – SEE PUMP SCHEDULE. **INSTALLATION ONLY.**
C	STAINLESS STEEL DOUBLE GUIDE RAILS AND HARDWARE (X2). **INSTALLATION ONLY.**
D	STAINLESS STEEL INTERMEDIATE RAIL SUPPORT AND HARDWARE (X4). **INSTALLATION ONLY.**
E	HALLIDAY SERIES S2S ACCESS DOOR MODEL S2S7260 72"X60". CONTRACTOR TO ACCOMMODATE DOOR WITH EITHER A PRECAST LID OR OTHER APPROVED MEANS.
F	PRECAST 9'X7'X4' (LXWXH) VALVE VAULT (INNER DIMENSIONS)
G	HALLIDAY SERIES R1R ACCESS DOOR MODEL R1R72. WITH PROTECTIVE GRATING PANEL (SERIES X RETRO-GRATE).
H	HALLIDAY SERIES DB PORTABLE HOIST (D2B36D). STANDARD FEATURES WITH STAINLESS STEEL WINCH ASSEMBLY AND HOOK.
I	HALLIDAY SERIES D STAINLESS STEEL HOIST, FLOOR STYLE, MODEL # D2S LINED
J	9" REINFORCED PORTLAND CEMENT CONCRETE ON A 6" CRUSHED BASE COURSE OVER PROPERLY PREPARED SUBGRADE.
K	STAINLESS STEEL LIFT OUT ASSEMBLY (50 FEET)
L	NEENAH FOUNDRY R-4370-1 6-3/8" DRAINAGE GRATE TYPE C FLOOR DRAIN W/4" PVC & P TRAP, CONNECT TO LIFT STATION
M	STAINLESS STEEL LIFT OUT CABLE (X2)
N	6" PVC VENT PIPE W/ #24 STAINLESS STEEL SCREEN TO BE REMOVABLE FOR CLEANING AND REPLACEMENT
O	CONTRACTOR TO VERIFY PIPING DIMENSIONS SUCH THAT THE FLANGE IS AS CLOSE TO THE WALL AS POSSIBLE, BUT STILL ACCESSIBLE TO CONNECT OR DISCONNECT FLANGE
P	CONTRACTOR TO SUBMIT DRAWING FOR 6' ACCESS COVER IN 7' OPENING.

PIPE FITTING SCHEDULE (continued)	
ID	FITTING
14	6" GATE VALVE WITH WHEEL. **INSTALLATION ONLY.**
15	ALUMINUM QUICK CONNECTOR AND CAP. **INSTALLATION ONLY.**
16	PIPE SUPPORTS
17	6" D.I. 90° ELBOW (X2). **INSTALLATION ONLY.**

NOTES:
1. ALL HARDWARE IN WET WELL TO BE 316 STAINLESS STEEL, INCLUDING FLANGE BOLTS.
2. STAINLESS STEEL 316 TO BE USED WHERE STAINLESS STEEL IS CALLED FOR.
3. PIPING IN VALVE VAULT TO BE DUCTILE IRON PIPE.
4. ALL DUCTILE IRON FITTINGS TO BE EPOXY COATED.
5. **** INSTALLATION ONLY–REFERS TO THE MATERIALS ON SHEET C7 ONLY ****

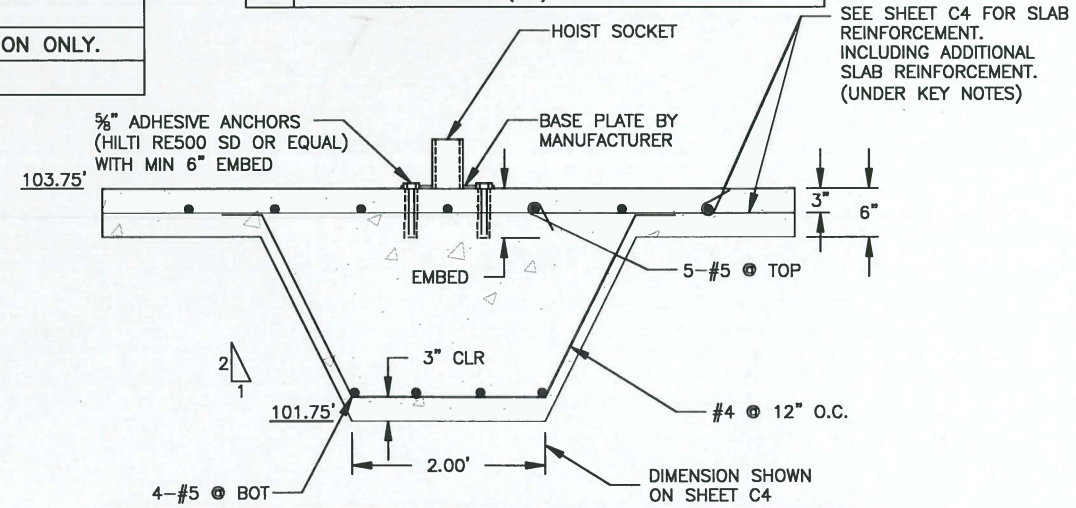

2 THICKENED CONCRETE SLAB
C4 | C16
N.T.S.

CONSULTANT'S SHEET
PROJECT NO. 20580-04

LUIS J. NAVA 94121 LICENSED PROFESSIONAL ENGINEER STATE OF TEXAS

INTERNATIONAL CONSULTING ENGINEERS
1723 N. CLOSNER BLVD., SUITE B
EDINBURG, TX. 78541
PHONE: 956.383.6204
FAX: 361.826.8300
T.B.P.E. FIRM REGISTRATION #F - 10837

THE CITY OF Edinburg
415 W. UNIVERSITY DRIVE
EDINBURG, TX. 78541
PHONE: 956.388.8204
FAX: 956-383-7411

REVISION NO.	DATE	BY	DESCRIPTION

CITY OF EDINBURG
LIFT STATION 42 REHAB & UPGRADE-RE BID

LIFT STATION DETAILS

DRAWING NO.
C16
SHEET 17 of 36

FILE NAME: Z:\2020\Engineering\City of Edinburg\Lift Station #42 Rehab & Upgrade - Re Bid\Drawings\Civil\(17)-C16-LIFT STATION DETAILS.dwg LAYOUT NAME: Layout1 PLOTTED: Thursday, June 04, 2020 - 8:32am USER: Owner

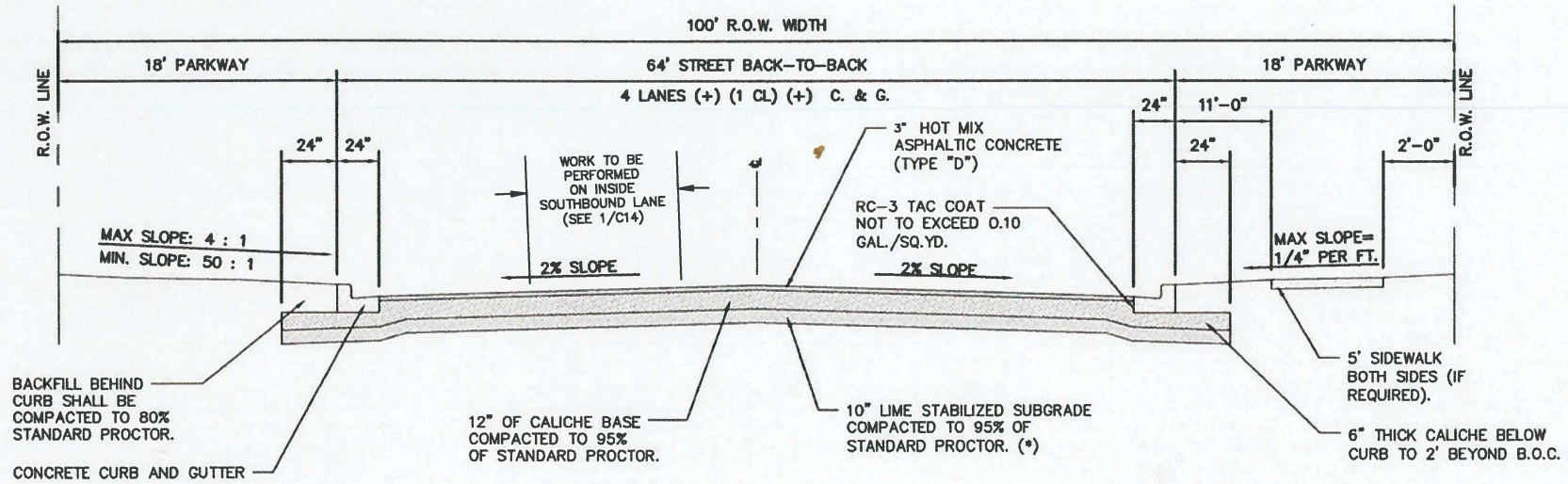

FLEXIBLE BASE (TYPE E GRADE 4) SHALL CONFORM TO THE FOLLOWING REQUIREMENTS , PRIOR TO THE ADDITION OF LIME:

Retained on Sg. Sieve	Percent Required
2"	0
½"	20 – 60
No. 4	40 – 75
No. 40	70 – 90
Max. PI:	15
Max. Wet Ball PI:	15
Wet Ball Mill Max Amount	50

(*) TO BE DETERMINED BY GEO-TECHNICAL REPORT.

NOTE:

IF AN ALTERNATIVE PAVEMENT SECTION IS REQUESTED, A PAVEMENT DESIGN ANALYSIS WILL BE REQUIRED FOR APPROVAL BY THE DIRECTOR OF PUBLIC WORKS.

P-5

MINOR ARTERIAL
STREET SECTION DETAIL

SCALE: N.T.S.	REVISED: JAG/PNL
DATE: MARCH, 2014	DRAWN BY: RMM/JAG

THE CITY OF EDINBURG
PUBLIC WORKS DEPARTMENT

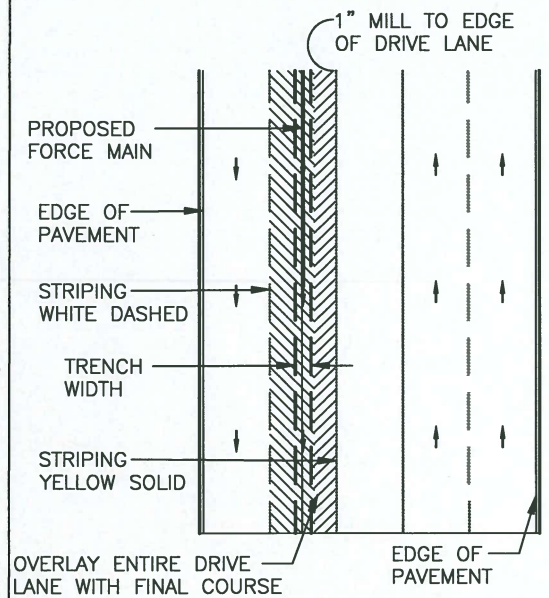

PLAN VIEW

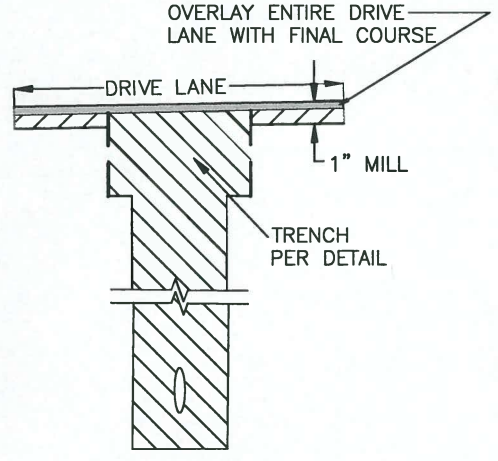

SECTION VIEW

1 C8 C17 C9–C13 **PAVEMENT SEAM DETAIL**
NOT TO SCALE

CONSULTANT'S SHEET
PROJECT NO. 20580-04

STATE OF TEXAS
LUIS J. NAVA
94121
LICENSED
PROFESSIONAL ENGINEER
6/5/20

IOE
INTERNATIONAL CONSULTING ENGINEERS
PHONE: 956.329.5404 FAX: 961.828.5808
1722 N. CLOSNER BLVD., SUITE B EDINBURG, TX 78541
T.B.P.E. FIRM REGISTRATION #F-10837

THE CITY OF Edinburg
415 W. UNIVERSITY DRIVE EDINBURG, TX 78541
PHONE: 956.388-8204 FAX: 956-383-7411

CITY OF EDINBURG
LIFT STATION 42 REHAB & UPGRADE-RE BID

PAVEMENT DETAILS

DRAWING NO.
C17
SHEET 18 of 36

REVISION NO.	DATE	BY	DESCRIPTION

FILE NAME: Z:\2020\Engineering\City of Edinburg\Lift Station #42 Rehab & Upgrade – Re Bid\Drawings\Civil\(18)-C17-PAVEMENT DETAILS.dwg LAYOUT NAME: Layout1 PLOTTED: Thursday, June 04, 2020 – 8:32am USER: Owner

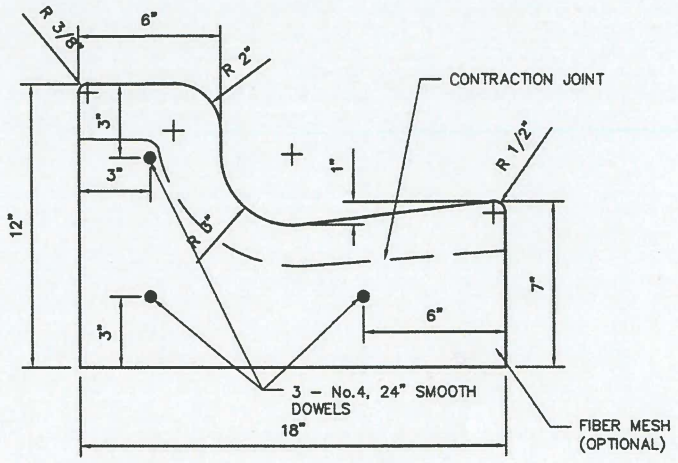

GENERAL NOTES:

1. CONCRETE SHALL BE 3000 PSI COMPRESSIVE STRENGTH AT 28 DAY
2. ALL CONCRETE WORK SHALL BE TREATED WITH MEMBRANE CURING COMPOUND TYPE 2 WHITE PIGMENTED ACCORDANCE WITH TEXAS DEPARTMENT OF TRANSPORTATION DEPARTMENTAL MATERIALS SPECIFICATIONS ITEM 4650. CONSIDERED INCIDENTAL TO CONCRETE WORK.
3. ½"EXPANSION JOINTS REQUIRED AT 40' C.C. AND AT THE BEGINNING AND END OF ALL RADII. CONTRACTION JOINTS SHALL NOT EXCEED 10' C.C.
4. EXPANSION JOINTS SHALL HAVE ½" EXPANSION JOINT MATERIAL AND 3 No.4 24" SMOOTH DOWEL BAR COATED TO PREVENT BOND.

CURB AND GUTTER DETAIL

NOT TO SCALE

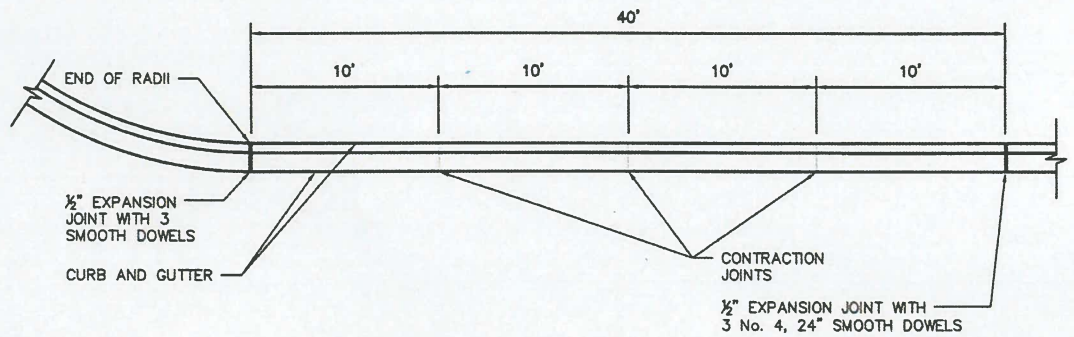

TYPICAL JOINTS

NOT TO SCALE

P-8	CURB AND GUTTER DETAILS	
	SCALE: N.T.S.	REVISED: IP/PNL
	DATE: MARCH, 2014	DRAWN BY: RMM

THE CITY OF EDINBURG
PUBLIC WORKS DEPARTMENT

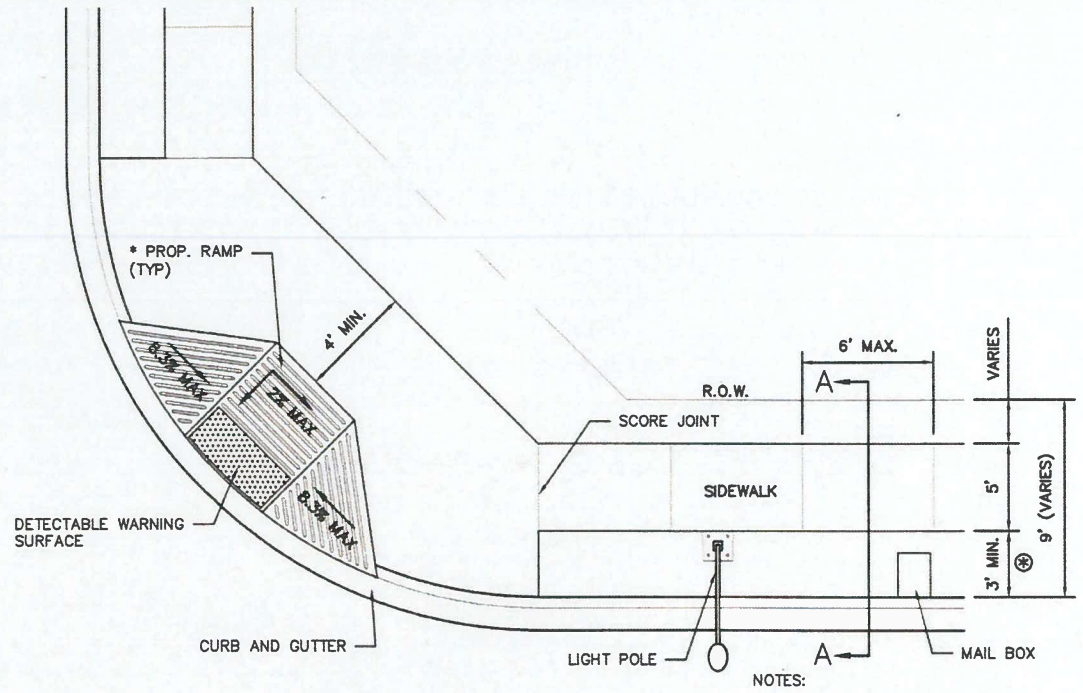

* NUMBER RAMPS AND RAMP TYPES MAY VARY WHERE PROPOSED.

PLAN VIEW

NOTES:

1. SCORE JOINTS ¼" THICKNESS OF SIDEWALK
2. EXPANSION JOINT EVERY 30'
3. JOINT IN CENTER OF SIDEWALK IF OVER 15' WIDE.

⊛ ANY OTHER DEVIATION SHOULD BE APPROVED BY DIRECTOR OF PUBLIC WORKS.

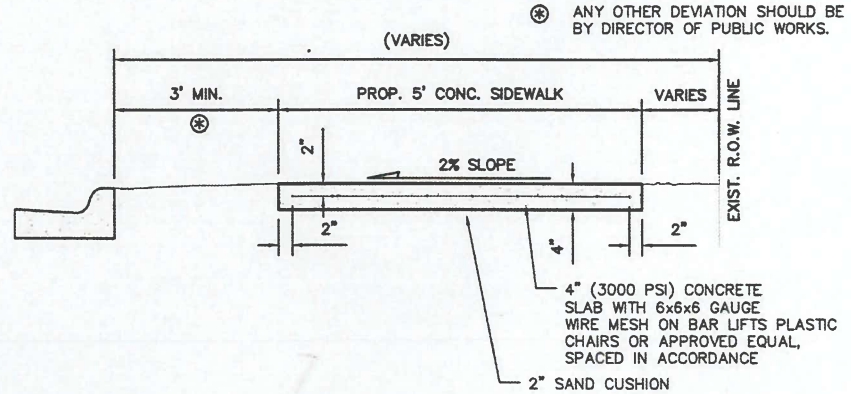

SECTION A–A

TYPICAL CONCRETE SIDEWALK DETAIL

P-10	CONCRETE SIDEWALK DETAILS	
	SCALE: N.T.S.	REVISED: IP/PNL
	DATE: APRIL, 2014	DRAWN BY: RMM

THE CITY OF EDINBURG
PUBLIC WORKS DEPARTMENT

CONSULTANT'S SHEET
PROJECT NO. 20580-04

STATE OF TEXAS LUIS J. NAVA 84121 LICENSED PROFESSIONAL ENGINEER
ICE INTERNATIONAL CONSULTING ENGINEERS
1721 N. CLOSNER BLVD., SUITE B EDINBURG, TX 78541
PHONE: 956.220.5404 FAX: 361.857.5808
T.B.P.E. FIRM REGISTRATION #F-10837

THE CITY OF EDINBURG
415 W. UNIVERSITY DRIVE EDINBURG, TX 78541
PHONE: 956.388.8204 FAX: 956-383-7411

REVISION NO.	DATE	BY	DESCRIPTION

CITY OF EDINBURG
LIFT STATION 42 REHAB & UPGRADE-RE BID

CURB AND GUTTER DETAILS
CONCRETE SIDEWALK DETAILS

DRAWING NO. C18

SHEET 19 of 36

FILE NAME: Z:\2020\Engineering\City of Edinburg\Lift Station #42 Rehab & Upgrade - Re Bid\Drawings\Civil\(19)-C18-CURB AND GUTTER DETAILS AND CONCRETE SIDEWALK DETAILS.dwg LAYOUT NAME: Layout1 PLOTTED: Thursday, June 04, 2020 - 8:32am USER: Owner

Mar 12, 2014 - 10:12AM

Apr 03, 2014 - 4:29PM

NOTES AS PER TEXAS DEPT. OF HEALTH MANUAL:

A. WATER LINE/NEW SEWER LINE SEPARATION.
WHEN NEW SANITARY SEWERS ARE INSTALLED, THEY SHALL BE INSTALLED NO CLOSER TO WATERLINE THAN NINE FEET IN ALL DIRECTIONS, SEWERS THAT PARALLEL WATERLINES MUST INSTALLED IN SEPARATE TRENCHES, WHERE THE NINE FOOT SEPARATION DISTANCE CANNOT BE ACHIEVED, THE FOLLOWING GUIDELINES WILL APPLY

1. WHERE A SANITARY SEWER PARALLELS A WATERLINES, THE SEWER SHALL BE CONSTRUCTED OF CAST IRON, DUCTILE IRON OR PVC. MEETING ASTM SPECIFICATIONS WITH A PRESSURE RATING FOR BOTH THE PIPE AND JOINTS OF 150 PSI. THE VERTICAL SEPARATION SHALL BE MINIMUM OF TWO FEET BETWEEN OUTSIDE DIAMETERS AND HORIZONTAL SEPARATION SHALL BE A MINIMUM OF FOUR FEET BETWEEN OUTSIDE DIAMETER. THE SEWER SHALL BE LOCATE BELOW THE WATERLINE.

2. WHERE A SANITARY SEWER CROSSES A WATERLINE AND THE SEWER IS CONSTRUCTED OF CAST IRON, DUCTILE IRON OF PVC WITH A MINIMUM PRESSURE RATING OF 150 PSI, AN ABSOLUTE MINIMUM DISTANCE OF 6 INCHES BETWEEN OUTSIDE DIAMETER SHALL BE MAINTAINED, IN ADDITION THE SEWER SHALL BE LOCATED BELOW THE WATERLINE WHERE POSSIBLE AND ONE LENGTH OF THE SEWER PIPE MUST BE CENTERED ON THE WATERLINE.

3. WHERE A SEWER CROSSES UNDER A WATERLINE AND THE SEWER IS CONSTRUCTED OF ABS TRUSS PIPE, SIMILAR SEMI-RIGID PLASTIC COMPOSITE PIPE, CLAY PIPE OR CONCRETE PIE WITH GASKETS JOINTS, A MINIMUM TWO FEET SEPARATION DISTANCE SHALL BE MAINTAINED. THE INITIAL BACKFILL SHALL BE CEMENT STABILIZED SAND (TWO OR MORE BAGS OF CEMENT PER CUBIC YARD OF SAND) THE INITIAL BACKFIELD SHALL BE CEMENT STABILIZED SAND (TWO OF MORE BAGS OF CEMENT). FOR ALL SECTIONS OF SEWER WITHIN NINE FEET OF WATERLINE. THE INITIAL BACK FILL BE FROM ONE QUARTER DIAMETER.

4. WHERE A SEWER CROSSES OVER A WATERLINE ALL PORTIONS OF THE SEWER WITHIN NINE FEET OF THE WATERLINE SHALL BE CONSTRUCTED OF CAST IRON, DUCTILE IRON, OR PVC PIPE WITH A PRESSURE RATING OF A LEAST 150 PSI USING APPROPRIATE ADAPTERS, IN LIEU OF THIS PROCEDURE THE NEW CONVEYANCE MAY BE ENCASED IN A JOINT OF 150 PSI PRESSURE CLASS PIPE AT LEAST 18 FEET LONG AND TWO NOMINAL SIZES LARGER THAN THE NEW CONVEYANCE. THE SPACE AROUND THE CARRIER PIPE SHALL BE SUPPORTED AT 5 FEET INTERVALS WITH SPACERS OF THE FILLED TO THE SPRING-LINE WITH WASHED SAND. THE ENCASEMENT PIPE SHOULD BE CENTERED ON THE CROSSING AND BOTH ENDS SEALED WITH CEMENT GROUT OR MANUFACTURED SEAL.

B. WATER LINE/MANHOLE SEPARATION:
UNLESS SANITARY SEWER MANHOLES AND THE CONNECTING SEWER CAN BE MADE WATERTIGHT AND TESTED FOR LEAKAGE, THEY MUST BE INSTALLED SO AS TO PROVIDE A MINIMUM OF NINE FEET OF HORIZONTAL CLEARANCE FROM AN EXISTING OR PROPOSED WATERLINE, WHERE THE NINE FOOT SEPARATION DISTANCE CANNOT BE ACHIEVED, A CARRIER PIPE AS DESCRIBED IN SUBSECTION A-4 OF THIS SECTION MAY BE USED WHERE APPROPRIATE.

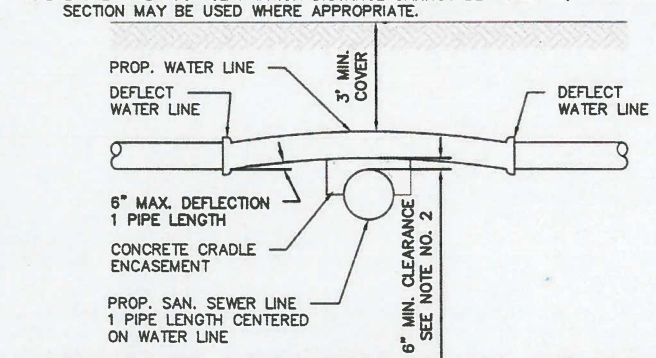

WATERLINE CROSSING OVER SEWER LINE

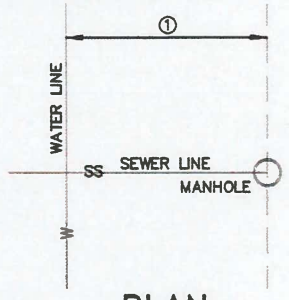

PLAN

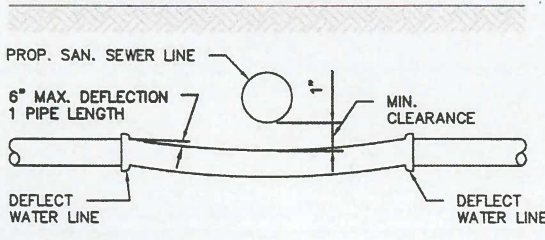

WATERLINE CROSSING UNDER SEWER LINE

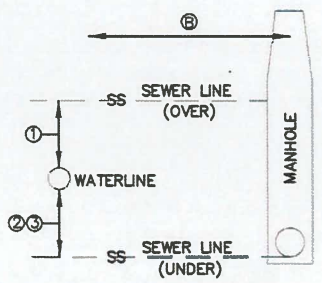

PROFILE

W-6	WATER/SANITARY SEWER CROSSING DETAILS	
	SCALE: N.T.S.	REVISED: JAG
	DATE: FEBRUARY, 2010	DRAWN BY: JAG

THE CITY OF EDINBURG
PUBLIC WORKS DEPARTMENT

NOTE: WHEN UTILITY LOCATED WITHIN CITY R.O.W., ALL BACKFILL IS SUBJECT TO INSPECTION AND APPROVAL BY THE CITY ENGINEER'S OFFICE

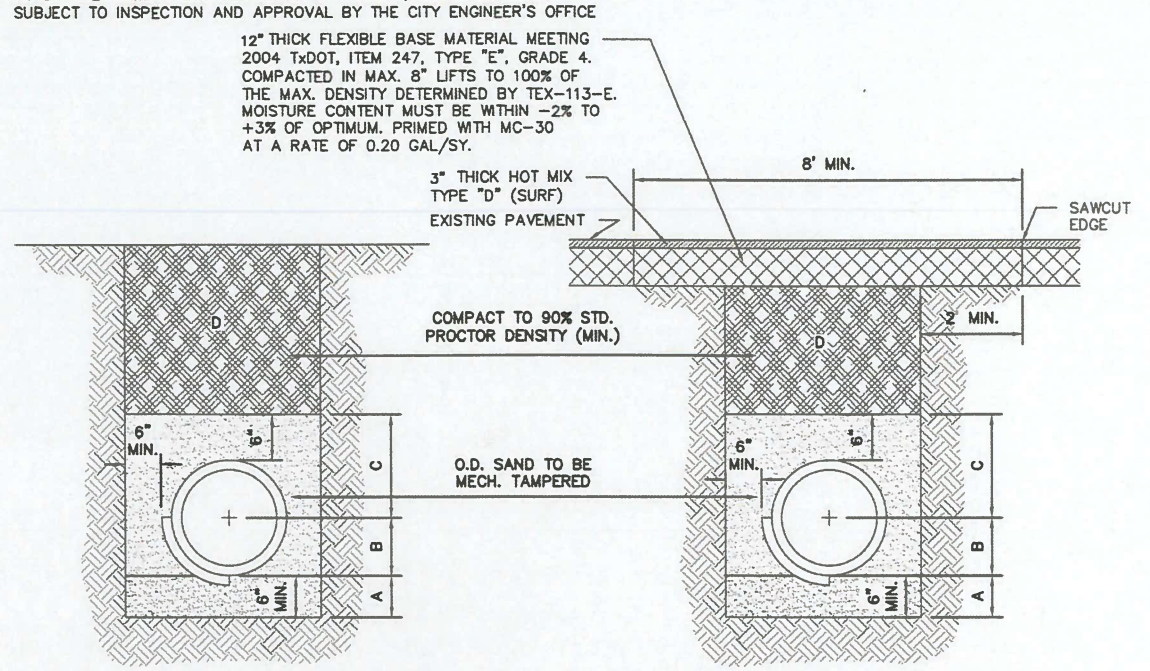

STANDARD PIPE BEDDING (MAIN & SERVICE LATERALS)

APPLICABLE BENEATH FUTURE/UNPAVED STREETS

A. SAND BEDDING PLACED BEFORE PIPE IS LAID UP TO FLOW LINE OF PIPE. (MIN. THICKNESS = 6")

B. SAND BACK FILL PLACED AFTER PIPE IS LAID FROM BOTTOM OF PIPE TO SPRING LINE OF PIPE. (4" LIFTS, MECH. TAMPED).

C. SAND BACK FILL PLACED FROM SPRING LINE OF PIPE TO 6" ABOVE TOP OF PIPE. (6" LIFTS, MECH. TAMPED).

D. FILL TRENCH W/SELECT BACKFILL, W/12" LIFTS COMPACT TO 90% STD. PROCTOR.

FOUNDATION PREPARATION (WELL POINTS, GRAVEL OR CEMENT STABILIZATION, OR APPROVED SUBSTITUTE) SHALL BE REQUIRED WHEN TRENCH BOTTOM IS UNSTABLE.

BACK FILLING AT STRUCTURES SHALL BE PLACED IN UNIFORM LAYERS, MOISTENED AS REQUIRED TO APPROXIMATE OPTIMUM MOISTURE CONTENTS AND COMPACTED TO 95% STANDARD PROCTOR DENSITY. THE THICKNESS OF EACH LOOSE LAYER SHALL BE SAND, APPROVED SITE SOIL OR OTHER APPROVED SUBSTITUTE.

STANDARD PIPE BEDDING (MAIN ONLY)

(PARALLEL WITHIN EXIST. STREET)

A. SAND BEDDING PLACED BEFORE PIPE IS LAID UP TO FLOW LINE OF PIPE. (MIN. THICKNESS = 6")

B. SAND BACK FILL PLACED AFTER PIPE IS LAID FROM BOTTOM OF PIPE TO SPRING LINE OF PIPE. (4" LIFTS, MECH. TAMPED).

C. SAND BACK FILL PLACED FROM SPRING LINE OF PIPE TO 6" ABOVE TOP OF PIPE. (6" LIFTS, MECH. TAMPED).

D. FILL TRENCH W/SELECT BACKFILL, W/12" LIFTS COMPACT TO 90% STD. PROCTOR.

FOUNDATION PREPARATION (WELL POINTS, GRAVEL OR CEMENT STABILIZATION, OR APPROVED SUBSTITUTE) SHALL BE REQUIRED WHEN TRENCH BOTTOM IS UNSTABLE.

BACK FILLING AT STRUCTURES SHALL BE PLACED IN UNIFORM LAYERS, MOISTENED AS REQUIRED TO APPROXIMATE OPTIMUM MOISTURE CONTENTS AND COMPACTED TO 95% STANDARD PROCTOR DENSITY. THE THICKNESS OF EACH LOOSE LAYER SHALL BE SAND, APPROVED SITE SOIL OR OTHER APPROVED SUBSTITUTE.

NOTE: ALL EXISTING/ACTIVE STREET CROSSINGS SHALL REQUIRE SAND BACKFILL OF ENTIRE TRENCH. (SEE DETAIL S-6)

S-7	SEWER STANDARD PIPE BEDDING DETAILS	
	SCALE: N.T.S.	REVISED: JAG
	DATE: DECEMBER, 2013	DRAWN BY: JAG

THE CITY OF EDINBURG
PUBLIC WORKS DEPARTMENT

CONSULTANT'S SHEET
PROJECT NO. 20580-04

LUIS J. NAVA 94121 LICENSED PROFESSIONAL ENGINEER STATE OF TEXAS
IE INTERNATIONAL CONSULTING ENGINEERS
1722 N. CLOSNER BLVD., SUITE B EDINBURG, TX 78541
PHONE: 956.329.5404 FAX: 956.383.8908
T.B.P.E. FIRM REGISTRATION #F- 10837

REVISION NO. | DATE | BY | DESCRIPTION

THE CITY OF EDINBURG
415 W. UNIVERSITY DRIVE EDINBURG, TX 78541
PHONE: 956.388.8204 FAX: 956.383.7411

CITY OF EDINBURG
LIFT STATION 42 REHAB & UPGRADE-RE BID

WATER/SANITARY SEWER CROSSING DETAILS
SEWER STANDARD PIPE BEDDING DETAILS

DRAWING NO. C20

SHEET 21 of 36

FILE NAME: Z:\2020\Engineering\City of Edinburg\Lift Station #42 Rehab & Upgrade - Re Bid\Drawings\Civil\(21)-C20-WATER SAN SEWER CROSSING DETAILS.dwg LAYOUT NAME: Layout1 PLOTTED: Thursday, June 04, 2020 - 8:33am USER: Owner

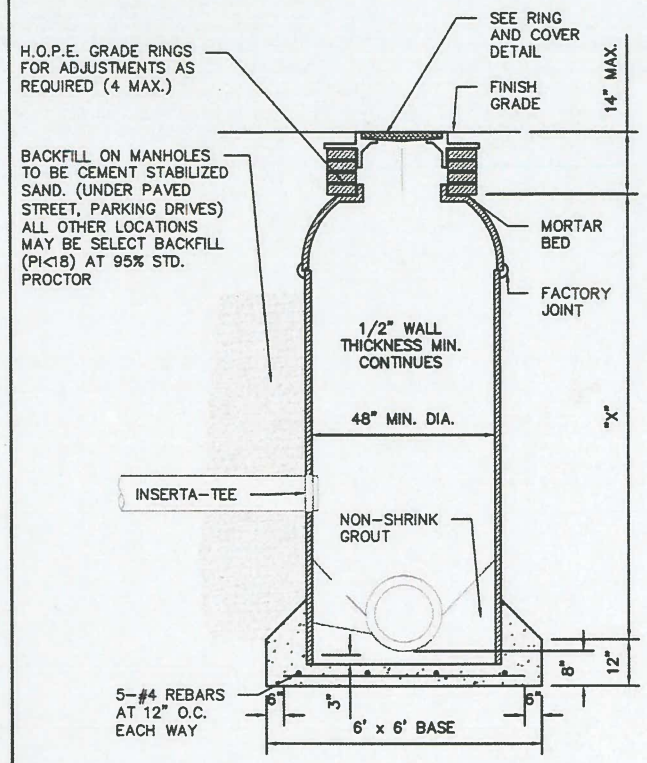

TYPICAL FIBERGLASS MANHOLE

NOTE: ALL DROP CONNECTIONS TO M.H. SHALL USE INSERTA-TEE

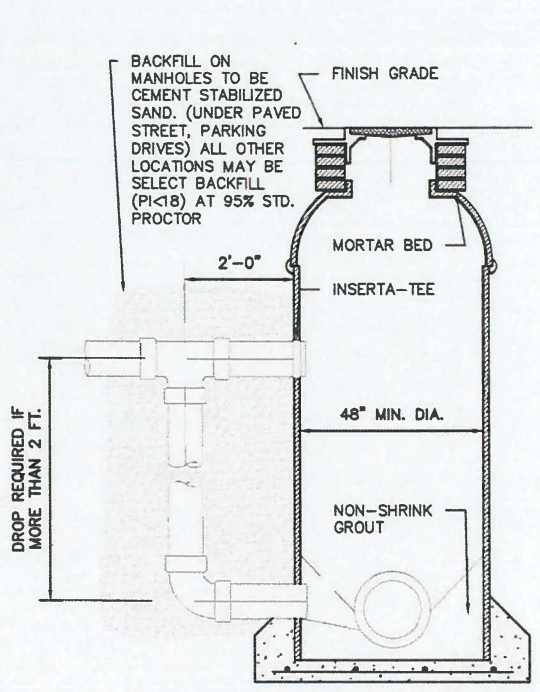

TYPICAL FIBERGLASS MANHOLE With DROP STRUCTURE

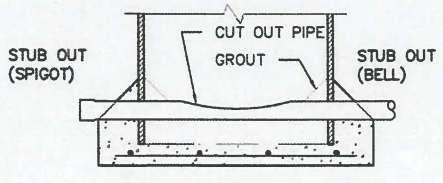

SECT. VIEW A-A

1. CUT PIPE TP LENGTH 7' FOR 4' M.H.
2. LAY PIPE
3. EXCAVATE UNDER PIPE FOR M.H. BASE MIN. 6"
4. PLACE REBAR MAT
5. PLACE CONCRETE
6. IMMEDIATELY PLACE FIBERGLASS M.H.
7. GROUT INSIDE WALLS OF M.H. AROUND PIPE
8. CUT OUT PIPE
9. NO PRE-CAST BASES PERMITTED

S-3	FIBERGLASS MANHOLE DETAILS	THE CITY OF EDINBURG PUBLIC WORKS DEPARTMENT
	SCALE: N.T.S. / REVISED: JAG	
	DATE: FEBRUARY, 2010 / DRAWN BY: RMM	

Dec 27, 2013 - 3:01PM

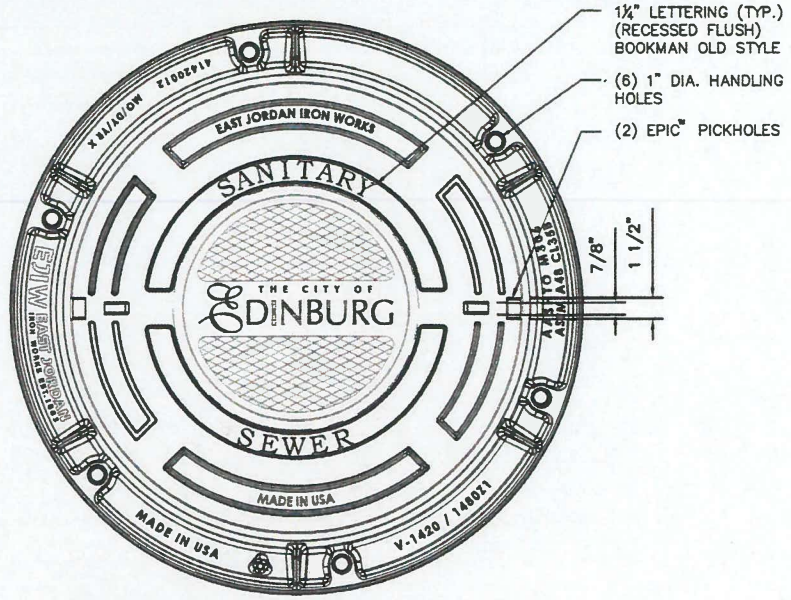

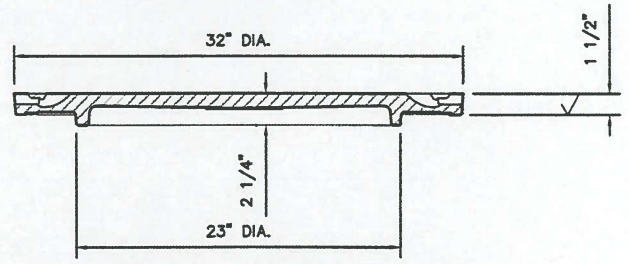

COVER SECTION

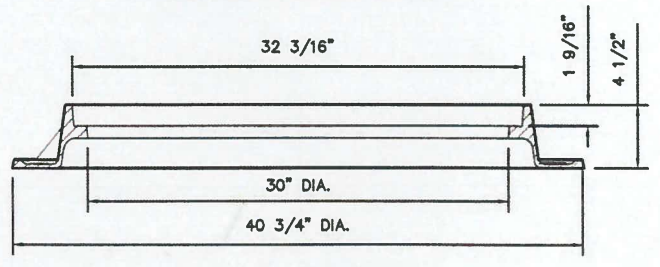

FRAME SECTION

CITY STANDARD ROADWAY MANHOLE RING AND COVER CASTING DETAIL

S-12	MANHOLE COVER DETAILS	THE CITY OF EDINBURG PUBLIC WORKS DEPARTMENT
	SCALE: N.T.S. / REVISED: JAG	
	DATE: DECEMBER, 2013 / DRAWN BY: RMM	

Dec 27, 2013 - 3:08PM

CONSULTANT'S SHEET
PROJECT NO. 20580-04

STATE OF TEXAS
LUIS J. NAVA
94121
LICENSED PROFESSIONAL ENGINEER

IOE
INTERNATIONAL CONSULTING ENGINEERS
PHONE: 956.329.5604
FAX: 361.628.5606
1722 N. CLOSNER BLVD., SUITE B
EDINBURG, TX 78541
T.B.P.E. FIRM REGISTRATION #F-10837

THE CITY OF Edinburg
415 W. UNIVERSITY DRIVE
EDINBURG, TX 78541
PHONE: 956.383-6204
FAX: 956-383-7411

CITY OF EDINBURG
LIFT STATION 42 REHAB & UPGRADE-RE BID

MANHOLE DETAILS

DRAWING NO. C21

SHEET 22 of 36

REVISION NO. | DATE | BY | DESCRIPTION

FILE NAME: Z:\2020\Engineering\City of Edinburg\Lift Station #42 Rehab & Upgrade - Re Bid\Drawings\Civil\(22)-C21-MANHOLE DETAILS.dwg LAYOUT NAME: Layout1 PLOTTED: Thursday, June 04, 2020 - 8:33am USER: Owner

NOTE: WHEN UTILITY LOCATED WITHIN CITY R.O.W., ALL BACKFILL IS SUBJECT TO INSPECTION AND APPROVAL BY THE CITY ENGINEER'S OFFICE

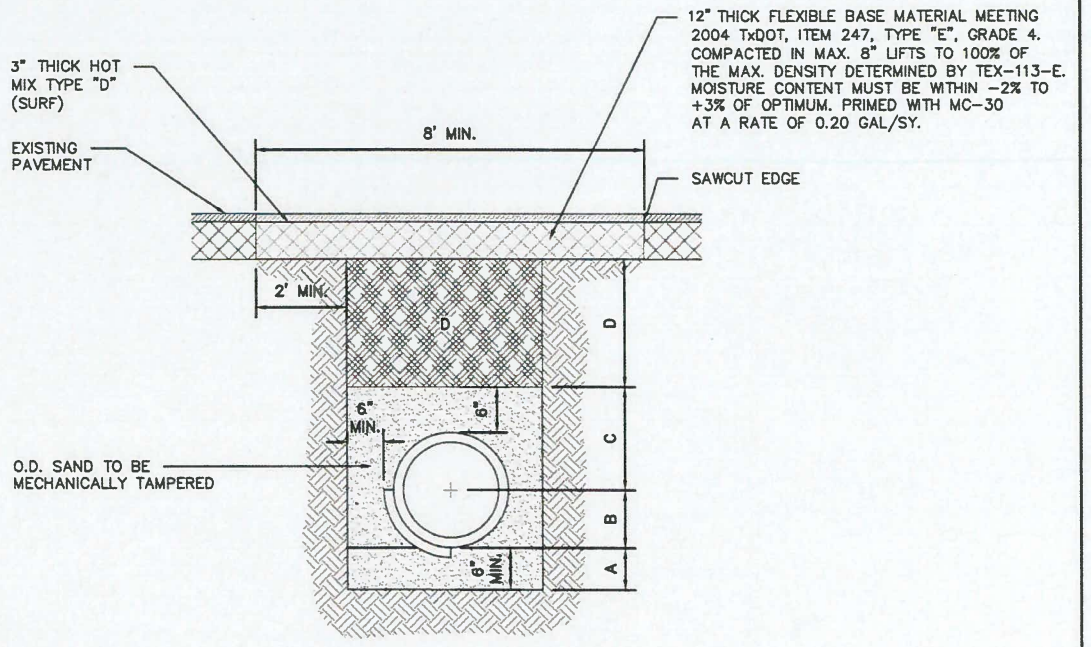

STANDARD PIPE BEDDING (MAIN & SERVICE LATERALS)

UNDER EXISTING/ACTIVE STREET CROSSINGS.

A. SAND BEDDING PLACED BEFORE PIPE IS LAID UP TO FLOW LINE OF PIPE. (MIN. THICKNESS = 6")

B. SAND BACK FILL PLACED AFTER PIPE IS LAID FROM BOTTOM OF PIPE TO SPRING LINE OF PIPE. (4" LIFTS, MECH. TAMPED).

C. SAND BACK FILL PLACED FROM SPRING LINE OF PIPE TO 6" ABOVE TOP OF PIPE. (6" LIFTS, MECH. TAMPED).

D. FILL TRENCH W/SELECT BACKFILL, W/12" LIFTS COMPACT TO 90% STD. PROCTOR.

FOUNDATION PREPARATION (WELL POINTS, GRAVEL OR CEMENT STABILIZATION, OR APPROVED SUBSTITUTE) SHALL BE REQUIRED WHEN TRENCH BOTTOM IS UNSTABLE.

BACK FILLING AT STRUCTURES SHALL BE PLACED IN UNIFORM LAYERS, MOISTENED AS REQUIRED TO APPROXIMATE OPTIMUM MOISTURE CONTENTS AND COMPACTED TO 95% STANDARD PROCTOR DENSITY. THE THICKNESS OF EACH LOOSE LAYER SHALL BE SAND, APPROVED SITE SOIL OR OTHER APPROVED SUBSTITUTE.

(WATER/SAN. SEWER)

Dec 27, 2013 - 3:04PM

S-8

UTILITY CROSSING AT EXISTING/ ACTIVE STREET DETAIL
(WATER / SEWER)

SCALE: N.T.S.	REVISED: JAG
DATE: DECEMBER, 2013	DRAWN BY: RMM

THE CITY OF EDINBURG
PUBLIC WORKS DEPARTMENT

BORING INSTALLATION		
CARRIER PIPE SIZE	PIPE CASING SIZE	MIN. WALL THICKNESS
6"	14"	0.187"
8"	16"	0.187"
10"	18"	0.250"
12"	20"	0.250"
14", 15"	24"	0.344"
16"	24"	0.344"
18"	30"	0.375"
24"	36"	0.375"
36"	48"	0.625"

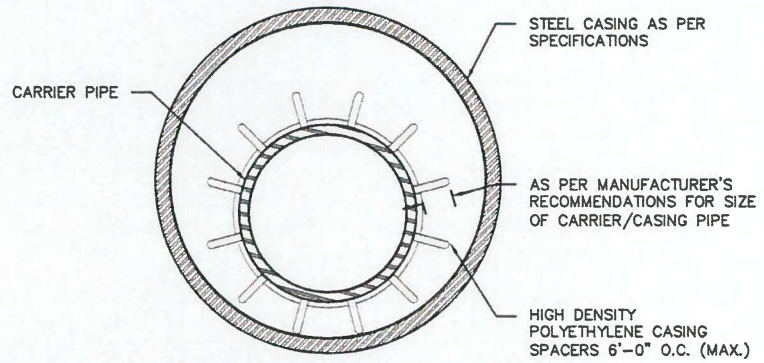

GENERAL NOTES:

1. ALL STEEL CASING SHALL BE WELDED.
2. STEEL CASING SHALL BE CLOSED AT EACH END USING BRICK OR BLOCK AND MORTAR GROUTED.
3. CASING SPACERS SHALL BE USED TO INSTALL THE CARRIER PIPE INSIDE THE ENCASEMENT PIPE. CASING SPACERS SHALL FASTEN TIGHTLY ONTO THE CARRIER PIPE SO THAT WHEN THE CARRIER PIPE IS BEING INSTALLED THE SPACERS WILL NOT MOVE ALONG THE PIPELINE. CASING SPACERS SHALL BE DOUBLED ON EACH END OF THE ENCASEMENT.
4. PROJECTION - TYPE CASING SPACERS SHALL BE CONSTRUCTED OF PREFORMED SECTIONS OF HIGH DENSITY POLYETHYLENE. THE FLEXIBLE SECTIONS SHALL BE JOINED TOGETHER AROUND THE PIPE TO PROVIDE A MINIMUM OF 16 PLASTIC PROJECTIONS PER SPACER SECTION.
5. INSTALLATION AND SIZE OF SPACERS SHALL BE AS PER MANUFACTURER'S RECOMMENDATIONS.

Dec 27, 2013 - 3:04PM

S-9

UTILITY LINE BORE DETAIL

SCALE: N.T.S.	REVISED: JAG
DATE: DECEMBER, 2013	DRAWN BY: RMM

THE CITY OF EDINBURG
PUBLIC WORKS DEPARTMENT

CONSULTANT'S SHEET
PROJECT NO. 20580-04

STATE OF TEXAS - LUIS J. NAVA - 94121 - LICENSED PROFESSIONAL ENGINEER

INTERNATIONAL CONSULTING ENGINEERS
1723 N. CLOSNER BLVD., SUITE B
EDINBURG, TX 78541
PHONE: 956.329.5404
FAX: 361.826.5808
T.B.P.E. FIRM REGISTRATION #F- 10837

THE CITY OF EDINBURG
415 W. UNIVERSITY DRIVE
EDINBURG, TX 78541
PHONE: 956.388-8204
FAX: 956-383-7411

REVISION NO.	DATE	BY	DESCRIPTION

CITY OF EDINBURG
LIFT STATION 42 REHAB & UPGRADE-RE BID

UTILITY CROSSING AT EXISTING/ACTIVE STREET DETAIL
UTILITY LINE BORE DETAIL

DRAWING NO.
C22

SHEET 23 of 36

FILE NAME: Z:\2020\Engineering\City of Edinburg\Lift Station #42 Rehab & Upgrade - Re Bid\Drawings\Civil\(23)-C22-UTILITY CROSSING DETAILS.dwg LAYOUT NAME: Layout1 PLOTTED: Thursday, June 04, 2020 - 8:33am USER: Owner

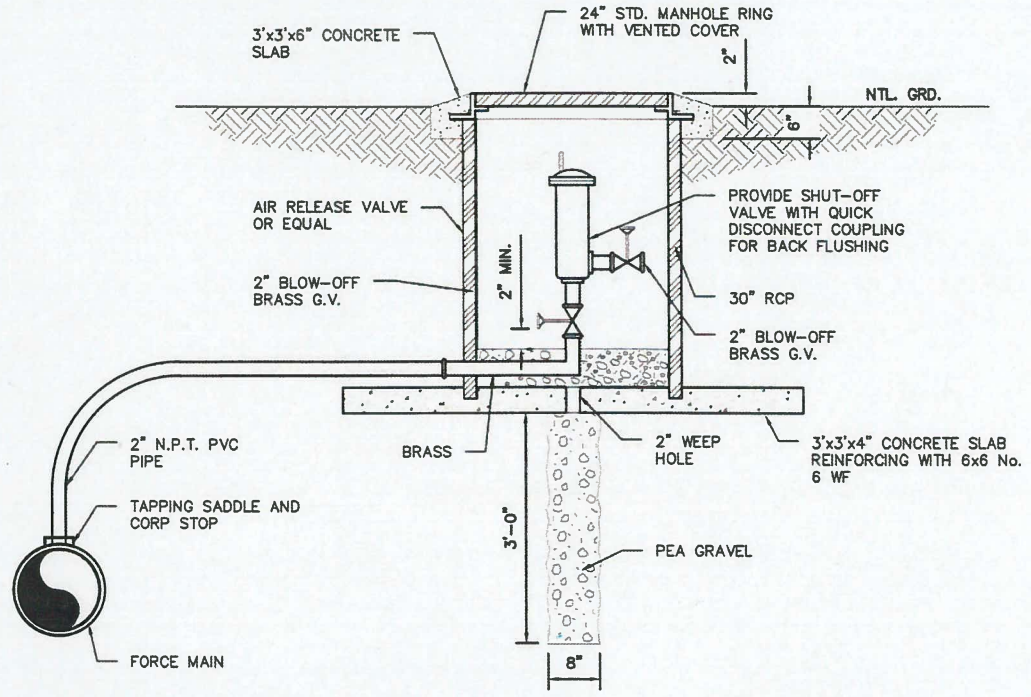

INSTALLATION DETAIL
SEWAGE AIR RELEASE VALVE

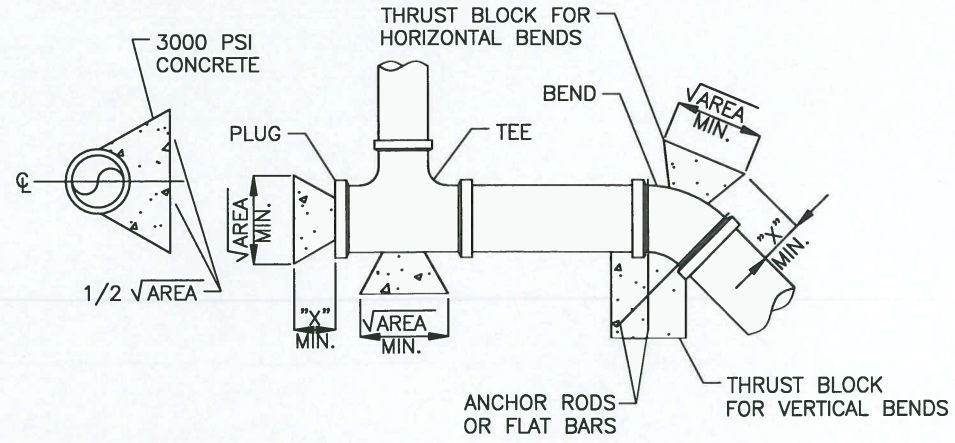

THRUST BLOCK REQUIREMENTS VS. FITTING PIPE

DIAMETER (IN.)	"X" (FEET)	END/TEE AREA (S.F.)	90° BEND AREA (S.F.)		45° BEND AREA (S.F.)		22.5° BEND AREA (S.F.)		11.25° BEND AREA (S.F.)	
4	1	1.4	1.9	3839	1.0	2077	0.5	1059	0.3	532
6	1	2.8	2.8	7932	2.1	4293	1.1	2188	0.5	1100
8	1.25	4.8	4.8	13646	3.7	7385	1.9	3765	0.9	1892
10	1.25	7.3	7.3	20528	5.6	11110	2.8	5664	1.4	2846
12	1.50	10.3	10.3	29030	7.9	15711	4.0	8009	2.0	4024
14	1.75	13.8	13.8	39001	10.6	21107	5.4	10760	2.7	5406
16	2	17.3	17.3	50442	13.6	27299	7.0	13917	3.5	6992

GENERAL NOTES:

1. THRUST BLOCKING TO BE PLACED AT ALL DEAD ENDS, TEES, BENDS, WYES, AND REDUCERS AND OTHER AREAS THAT REQUIRE THRUST RESISTANCE.
2. MINIMUM AREAS SHOWN ARE IN SQUARE FEET, BLOCK WEIGHTS FOR VERTICAL BENDS ARE IN POUNDS.
3. THRUST BLOCK AREAS SHOWN ARE BASED ON A TEST PRESSURE OF 150 P.S.I., SOIL BEARING PRESSURE OF 2000 PSF, AND MINIMUM 30" COVER. IF REQUIRED TEST PRESSURE IS LESS OR THE SOIL BEARING CAPACITY IS GREATER, THE CONTRACTOR MAY, AFTER APPROVAL BY THE ENGINEER, REDUCE THE THRUST BLOCK AREA SHOWN. THRUST BLOCKING AREA SHALL BE INCREASED IF SOIL BEARING CAPACITY IS LESS THAN 2000 P.S.I.
4. AT DOWNWARD VERTICAL BENDS, PIPING SHALL BE RESTRAINED BY THRUST BLOCK AS SHOWN WITH WEIGHT INDICATED IN THE TABLE. ANCHOR RODS OR FLAT BARS SHALL BE STAINLESS STEEL.
5. BEARING MUST BE ON UNDISTURBED EARTH.
6. USE 3000 P.S.I. CONCRETE
7. RESTRAINING JOINTS MAY BE REQUIRED AS SHOWN ON THE PLANS OR DIRECTED BY THE ENGINEER.
8. THRUST BLOCK SHALL BEAR ON FULL 180° OF CIRCUMFERENCE OF PIPE.

1 / C23 C23 — CONCRETE THRUST BLOCKS
SCALE: N.T.S.

S-11

SEWAGE AIR RELEASE VALVE DETAILS

SCALE: N.T.S.	REVISED: IP
DATE: DECEMBER, 2013	DRAWN BY: RMM

THE CITY OF EDINBURG
PUBLIC WORKS DEPARTMENT

Dec 27, 2013 - 3:09pm

CONSULTANT'S SHEET
PROJECT NO. 20580-04

STATE OF TEXAS — LUIS J. NAVA — 94121 — LICENSED PROFESSIONAL ENGINEER

INTERNATIONAL CONSULTING ENGINEERS
1722 N. CLOSNER BLVD., SUITE B
EDINBURG, TX 78541
PHONE: 956.289.8404
FAX: 361.854.5806
T.B.P.E. FIRM REGISTRATION #F-10837

THE CITY OF EDINBURG
415 W. UNIVERSITY DRIVE
EDINBURG, TX 78541
PHONE: 956.388.8204
FAX: 956-383-7411

CITY OF EDINBURG
LIFT STATION 42 REHAB & UPGRADE-RE BID

AIR RELEASE VALVE INSTALLATION
CONCRETE THRUST BLOCKS

DRAWING NO. C23

SHEET 24 of 36

REVISION NO. | DATE | BY | DESCRIPTION

FILE NAME: Z:\2020\Engineering\City of Edinburg\Lift Station #42 Rehab & Upgrade - Re Bid\Drawings\Civil\(24)-C23-AIR RELEASE VALVE INSTALLATION.dwg LAYOUT NAME: Layout1 PLOTTED: Thursday, June 04, 2020 - 8:33am USER: Owner

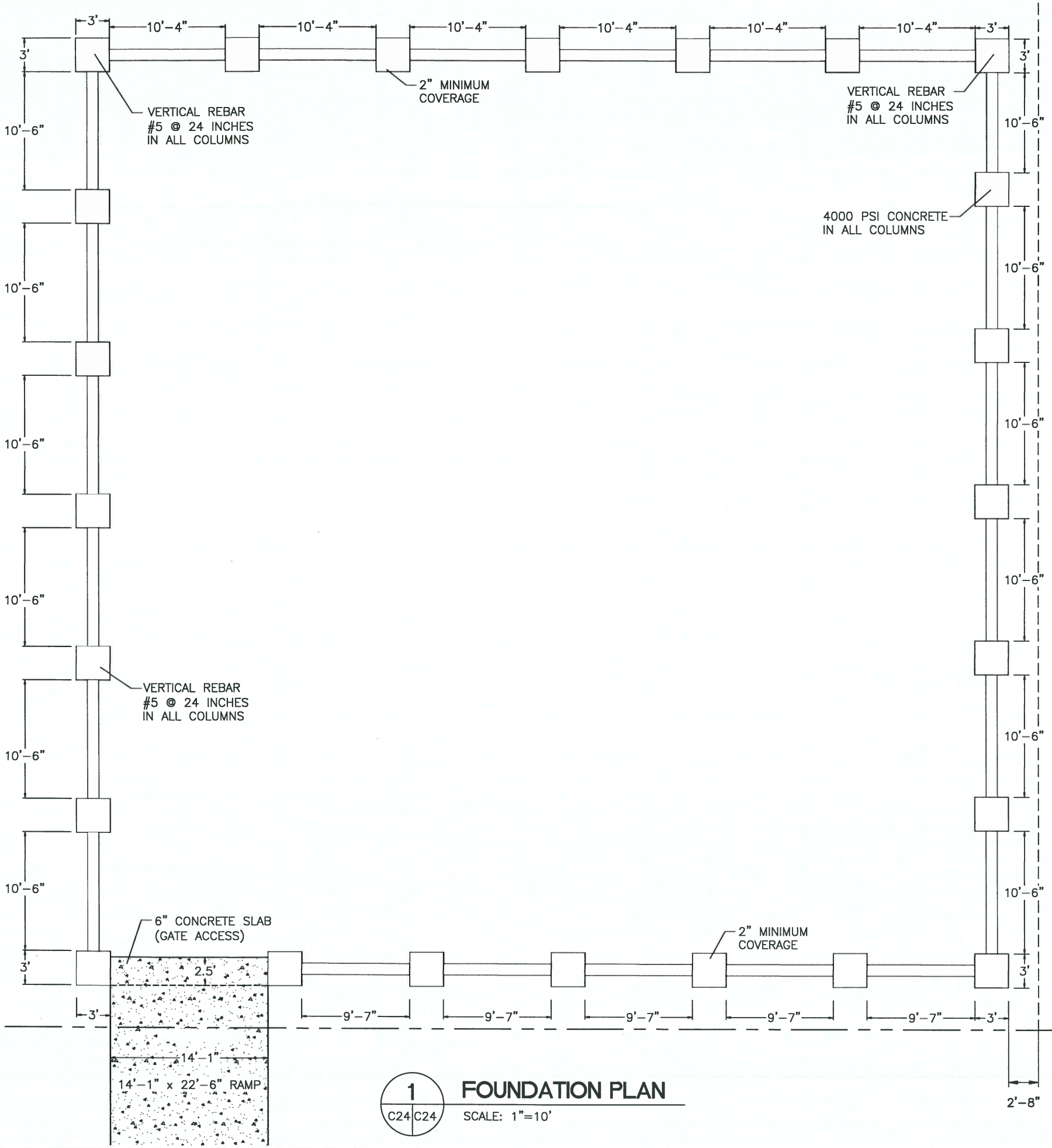

1 FOUNDATION PLAN

C24 | C24

SCALE: 1"=10'

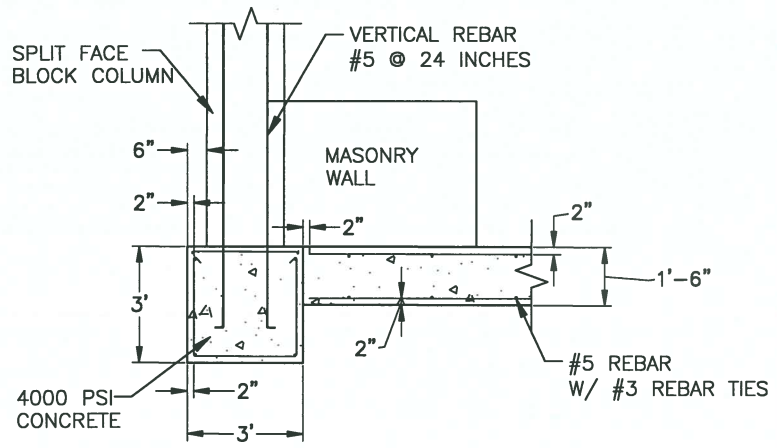

2 FOUNDATION COLUMN DETAIL

C24 | C24

SCALE: N.T.S.

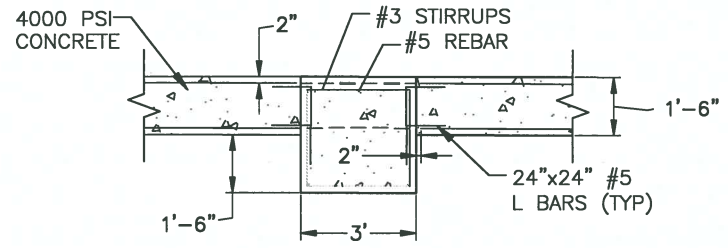

3 FOUNDATION CUT DETAIL

C24 | C24

SCALE: N.T.S.

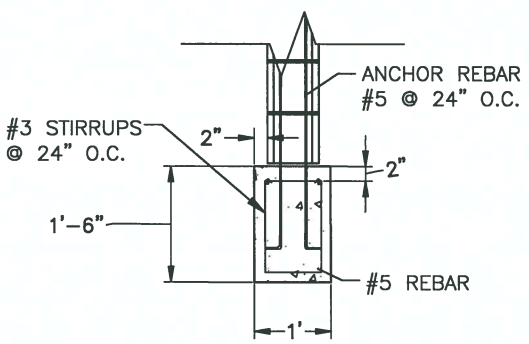

4 FOUNDATION WALL CUT DETAIL

C24 | C24

SCALE: N.T.S.

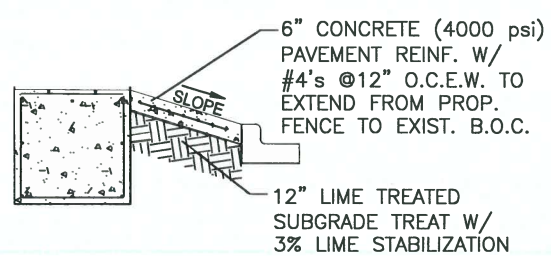

5 FOUNDATION RAMP DETAIL

C24 | C24

SCALE: N.T.S.

CONSULTANT'S SHEET
PROJECT NO. 20580–04

STATE OF TEXAS
LUIS J. NAVA
94121
LICENSED
PROFESSIONAL ENGINEER

IE
INTERNATIONAL CONSULTING ENGINEERS
1722 N. CLOSNER BLVD., SUITE B
EDINBURG, TX 78541
PHONE: 956.329.5404
FAX: 361.825.5900
T.B.P.E. FIRM REGISTRATION #F- 10837

THE CITY OF
Edinburg
415 W. UNIVERSITY DRIVE
EDINBURG, TX 78541
PHONE: 956.388.8204
FAX: 956.383.7411

REVISION NO.	DATE	BY	DESCRIPTION

CITY OF EDINBURG
LIFT STATION 42 REHAB & UPGRADE-RE BID

FENCE FOUNDATION PLAN

DRAWING NO.
C24

SHEET 25 of 36

FILE NAME: Z:\2020\Engineering\City of Edinburg\Lift Station #42 Rehab & Upgrade – Re Bid\Drawings\Civil\(25)–C24– FENCE FOUNDATION PLAN.dwg LAYOUT NAME: Layout1 PLOTTED: Thursday, June 04, 2020 – 8:33am USER: Owner

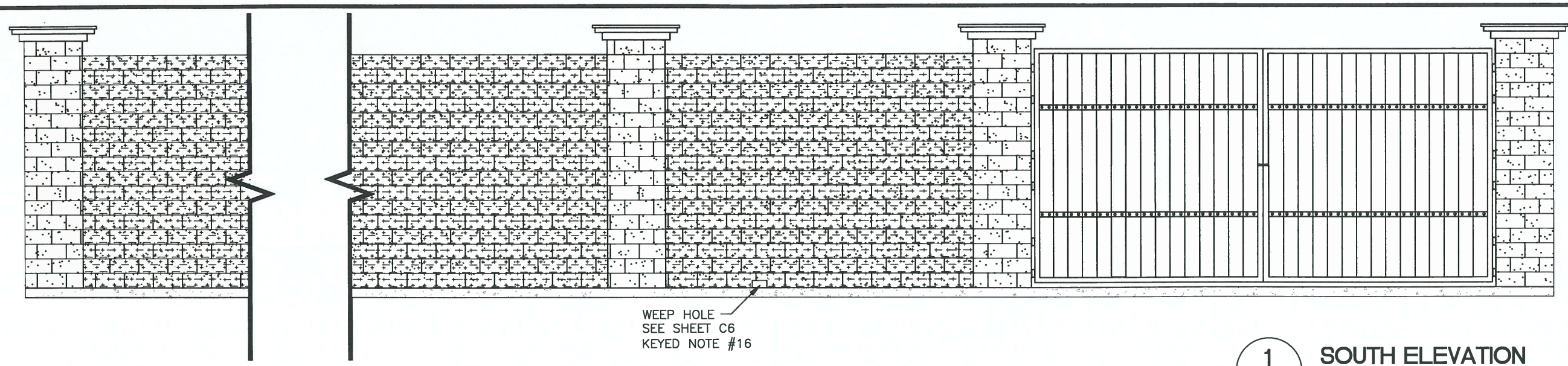

1 C5 C25 **SOUTH ELEVATION**
SCALE: 1/4"=1'-0"

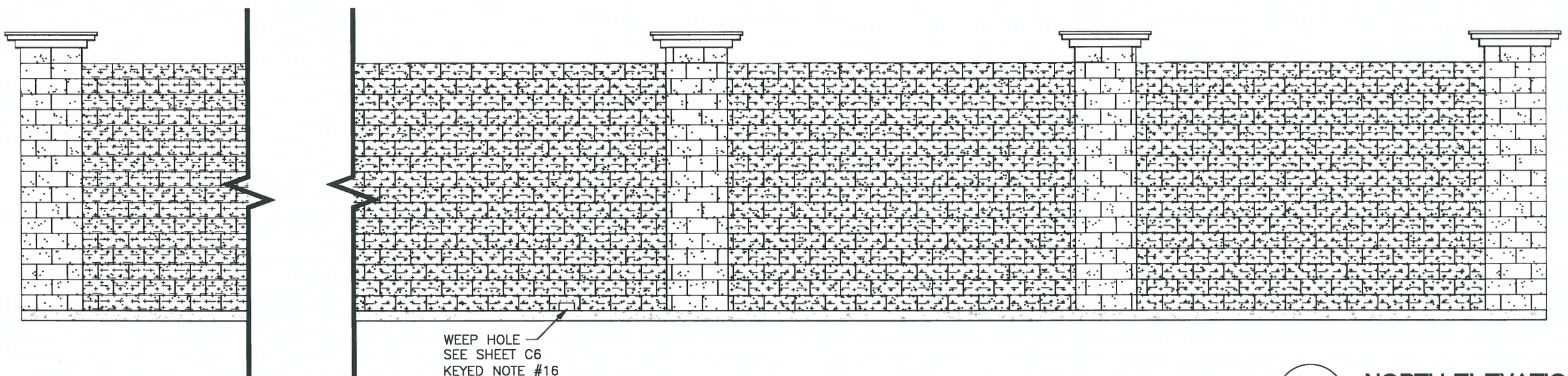

2 C5 C25 **NORTH ELEVATION**
SCALE: 1/4"=1'-0"

CONSULTANT'S SHEET
PROJECT NO. 20580-04

STATE OF TEXAS
LUIS J. NAVA
94121
LICENSED
PROFESSIONAL ENGINEER

INTERNATIONAL CONSULTING ENGINEERS
PHONE: 956.329.5404
FAX: 951.828.5806
1722 N. CLOSNER BLVD., SUITE B
EDINBURG, TX 78541
T.B.P.E. FIRM REGISTRATION #F - 10837

THE CITY OF Edinburg
PHONE: 956.388-6204
FAX: 956-383-7411
415 W. UNIVERSITY DRIVE
EDINBURG, TX 78541

CITY OF EDINBURG
LIFT STATION 42 REHAB & UPGRADE-RE BID

FENCE ELEVATION PLAN

DRAWING NO.
C25
SHEET 26 of 36

REVISION NO.	DATE	BY	DESCRIPTION

FILE NAME: Z:\2020\Engineering\City of Edinburg\Lift Station #42 Rehab & Upgrade - Re Bid\Drawings\Civil\(26)-C25- FENCE ELEVATION PLAN.dwg LAYOUT NAME: Layout1 PLOTTED: Thursday, June 04, 2020 - 8:33am USER: Owner

FILE NAME: Z:\2020\Engineering\City of Edinburg\Lift Station #42 Rehab & Upgrade – Re Bid\Drawings\Civil\(27)-C26-FENCE ELEVATION PLAN.dwg LAYOUT NAME: Layout1 PLOTTED: Thursday, June 04, 2020 – 8:33am USER: Owner

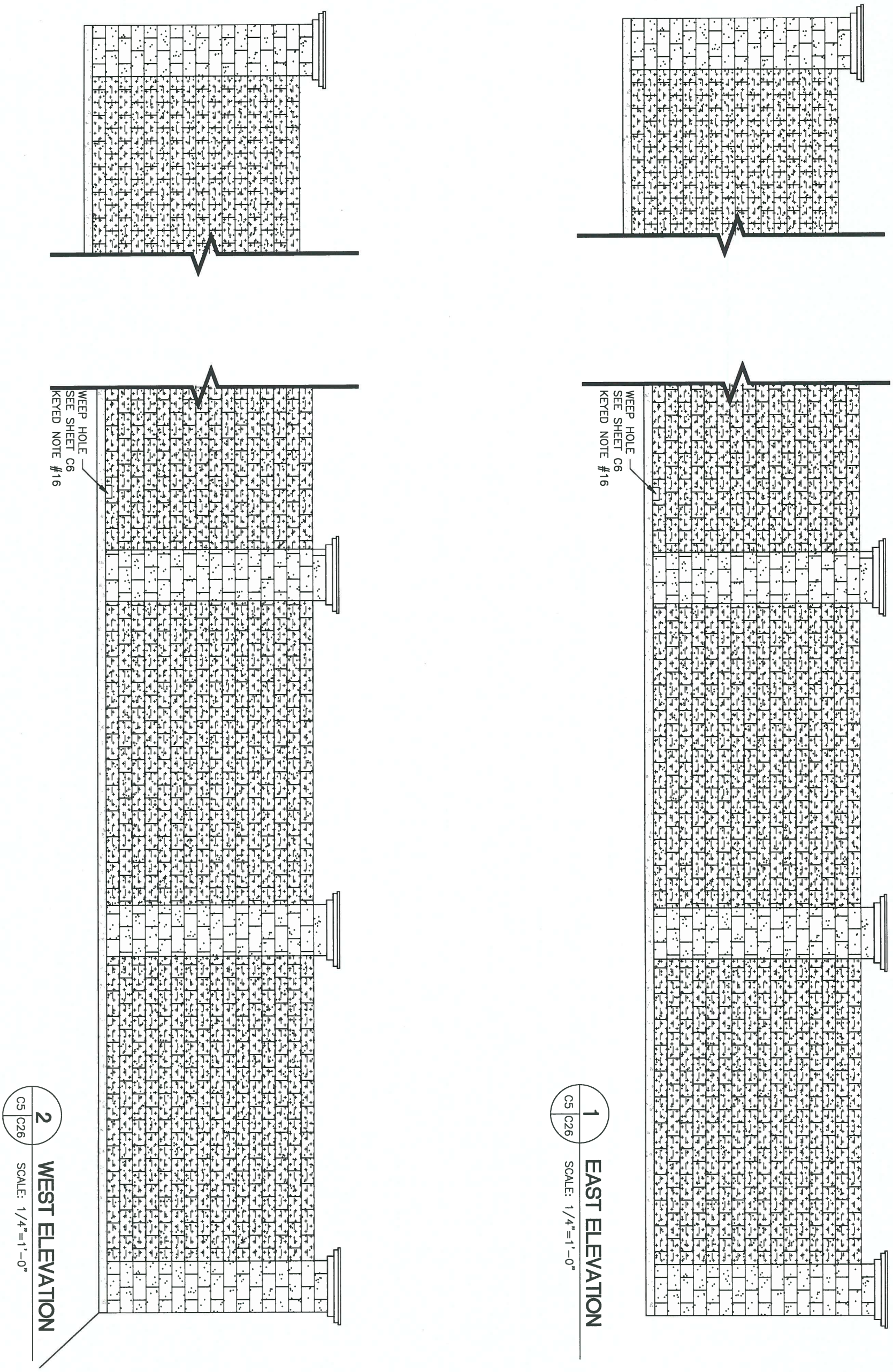

2 C5 C26 WEST ELEVATION
SCALE: 1/4"=1'-0"

1 C5 C26 EAST ELEVATION
SCALE: 1/4"=1'-0"

REVISION NO.	DATE	BY	DESCRIPTION	REVISION NO.	DATE	BY	DESCRIPTION

DRAWING NO. C26

SHEET 27 of 36

CITY OF EDINBURG
LIFT STATION 42 REHAB & UPGRADE-RE BID

FENCE ELEVATION PLAN

THE CITY OF Edinburg
PHONE: 956.388-8204
FAX: 956-383-7411
415 W. UNIVERSITY DRIVE
EDINBURG, TX 78541

ICE
INTERNATIONAL CONSULTING ENGINEERS
PHONE: 956.329.5404
FAX: 361.826.5806
1722 N. CLOSNER BLVD., SUITE B
EDINBURG, TX 78541
T.B.P.E. FIRM REGISTRATION #F - 10837

STATE OF TEXAS
LUIS J. NAVA
94121
LICENSED
PROFESSIONAL ENGINEER
PE
6/5/20

CONSULTANT'S SHEET
PROJECT NO. 20580-04

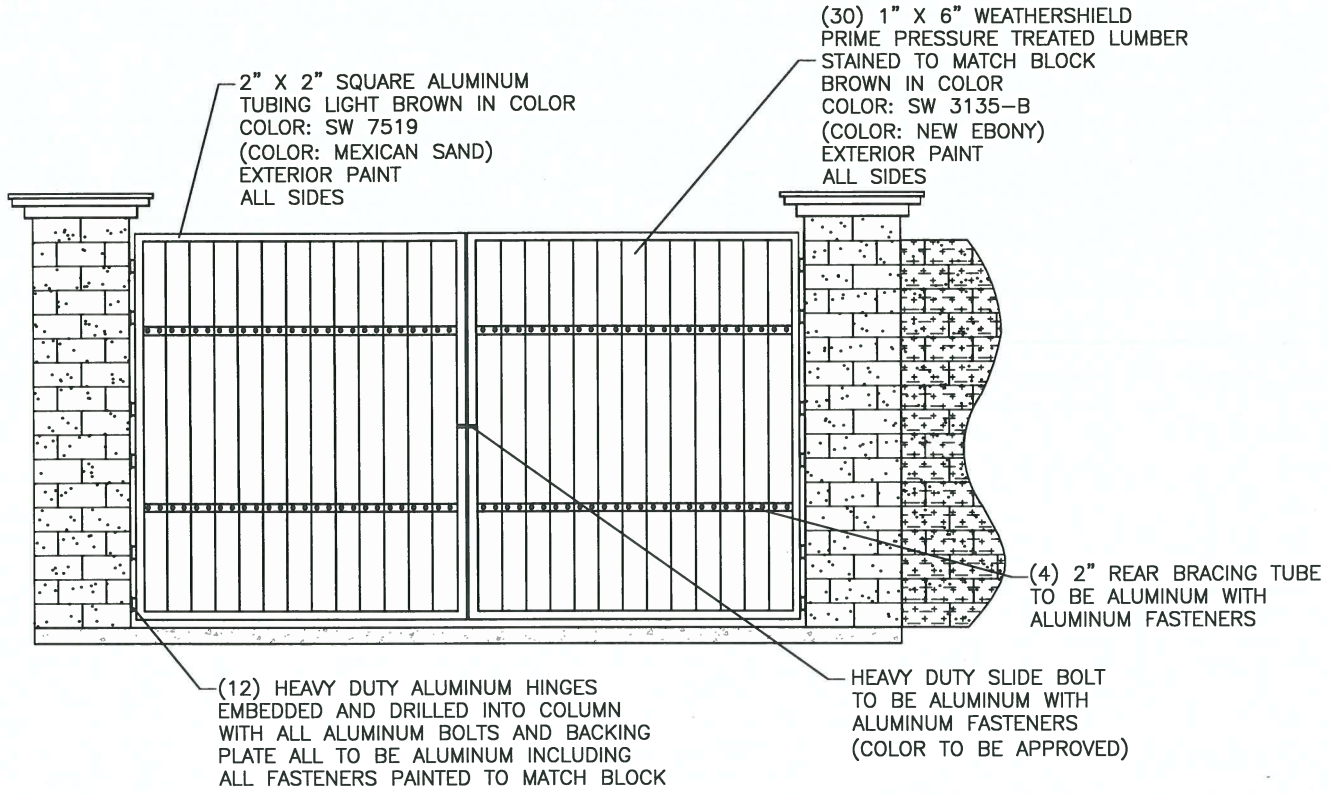

1 C4 C27 **DOOR DETAIL A-A**
SCALE: 1/4"=1'-0"

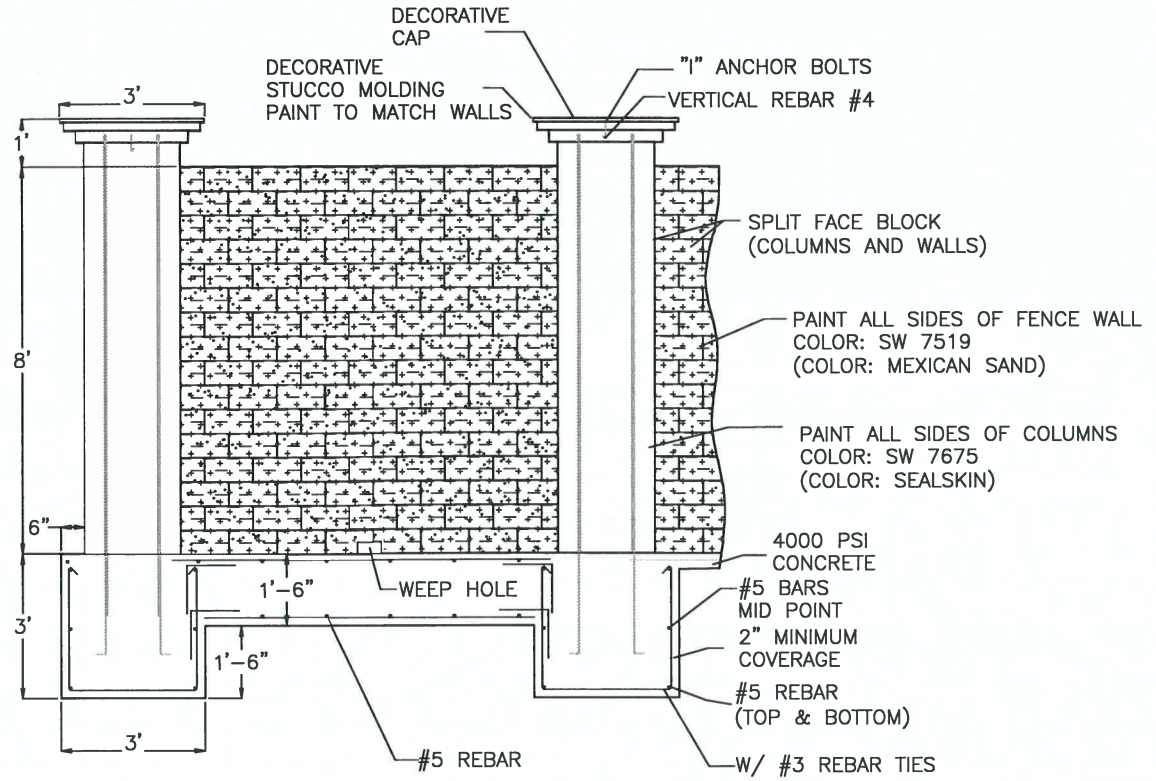

2 C6 C27 **SECTION DETAIL B-B**
SCALE: 1/4"=1'-0"

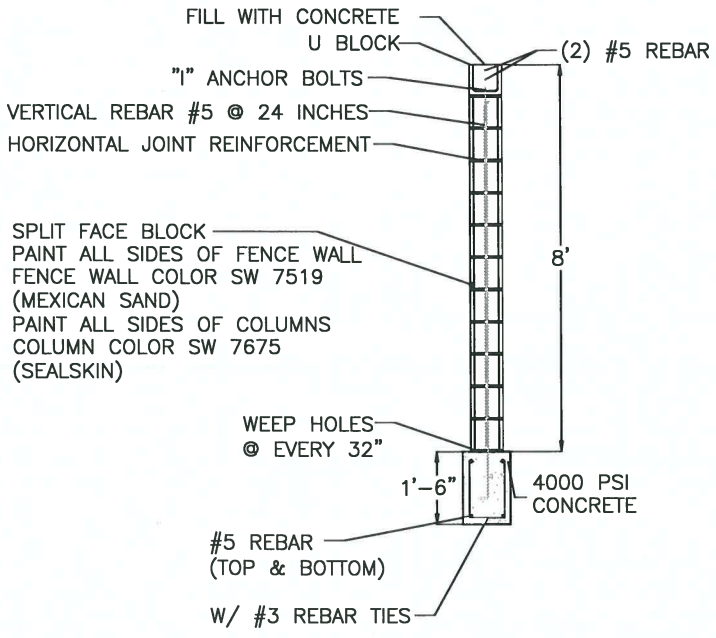

3 C6 C27 **WALL SECTION DETAIL C-C**
SCALE: 1/4"=1'-0"

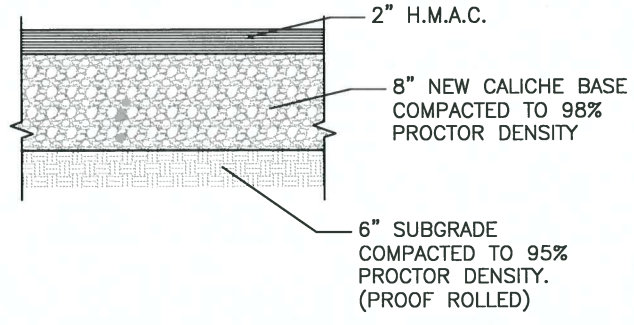

4 C5 C27 **ASPHALT PAVEMENT SECTION**
SCALE: N.T.S.

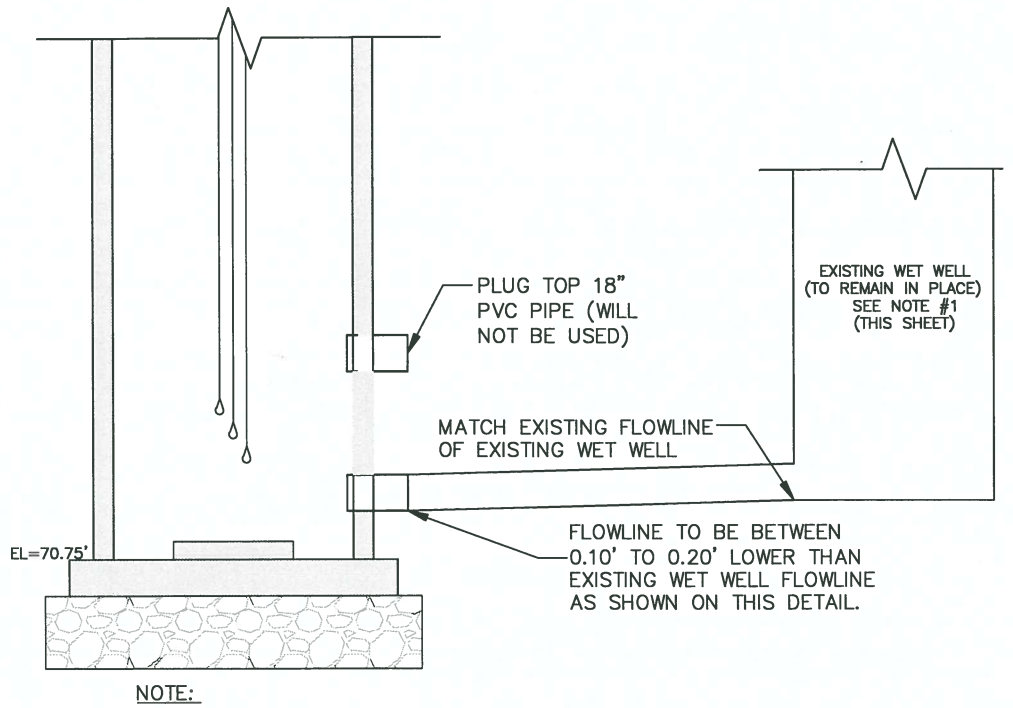

NOTE:

1. CONTRACTOR TO FURNISH AND INSTALL A TOTAL OF TWO TRASH BASKETS (HALLIDAY PRODUCTS SERIES B1A), ONE FOR EACH INFLUENT PIPE IN THE EXIST. WET WELL. CONTRACTOR TO VERIFY EXIST. WET WELL INFLUENT PIPE SIZES PRIOR TO PURCHASE.

5 C5 C27 **CONNECTION TO EXIST. WET WELL**
SCALE: N.T.S.

CONSULTANT'S SHEET
PROJECT NO. 20580-04

STATE OF TEXAS
LUIS J. NAVA
94121
LICENSED PROFESSIONAL ENGINEER

IOE
INTERNATIONAL CONSULTING ENGINEERS
PHONE: 956.329.5404 FAX: 961.828.5606
1722 N. CLOSNER BLVD., SUITE B EDINBURG, TX 78541
T.B.P.E. FIRM REGISTRATION #F-10837

THE CITY OF Edinburg
415 W. UNIVERSITY DRIVE EDINBURG, TX 78541
PHONE: 956.388-8204 FAX: 956-383-7411

CITY OF EDINBURG
LIFT STATION 42 REHAB & UPGRADE-RE BID

MISC. DETAILS

DRAWING NO.
C27

SHEET 28 of 36

REVISION NO.	DATE	BY	DESCRIPTION

FILE NAME: Z:\2020\Engineering\City of Edinburg\Lift Station #42 Rehab & Upgrade - Re Bid\Drawings\Civil\(28)-C27-FENCE DETAILS.dwg LAYOUT NAME: Layout1 PLOTTED: Thursday, June 04, 2020 - 8:33am USER: Owner

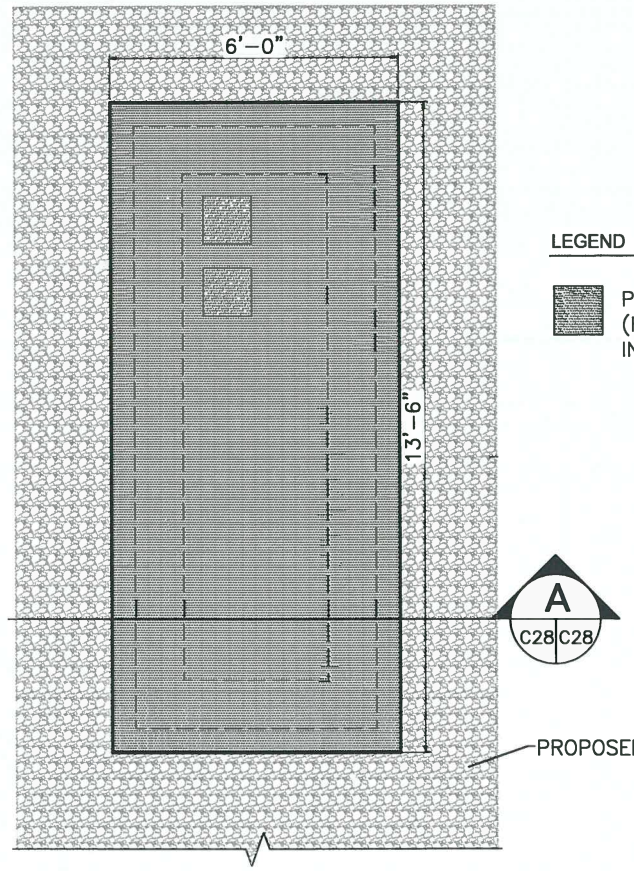

LEGEND

PROPOSED CONDUIT OPENINGS (REFER TO GENERATOR INSTALLATION MANUAL)

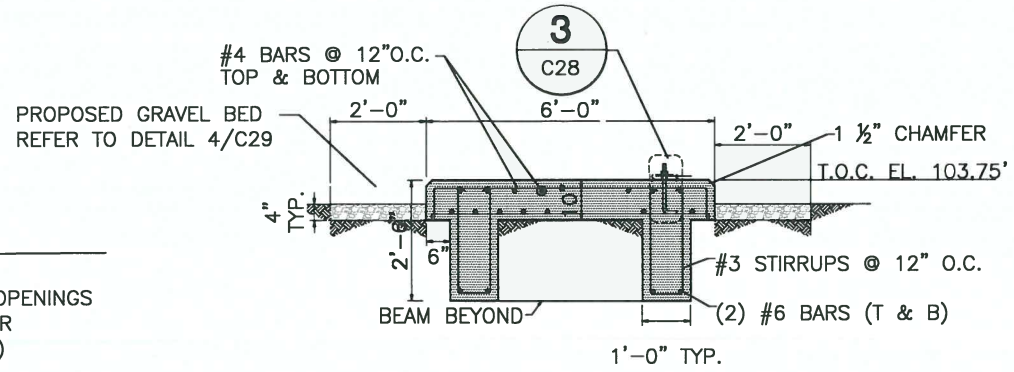

A SECTION AT CONC. GENERATOR PAD

A | C28 C28 — NOT TO SCALE

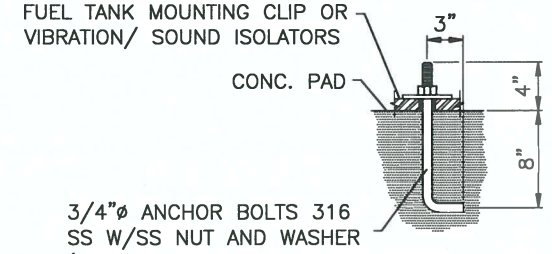

3 ANCHOR BOLT DETAIL

3 | C28 C28 — NOT TO SCALE

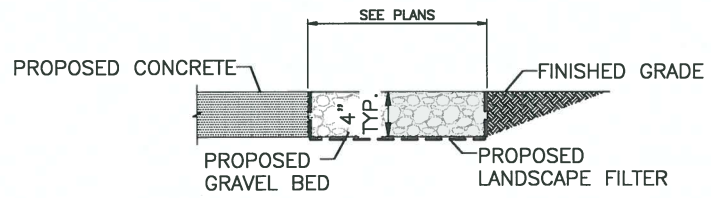

4 GRAVEL BED DETAIL

4 | C6 C28 — NOT TO SCALE

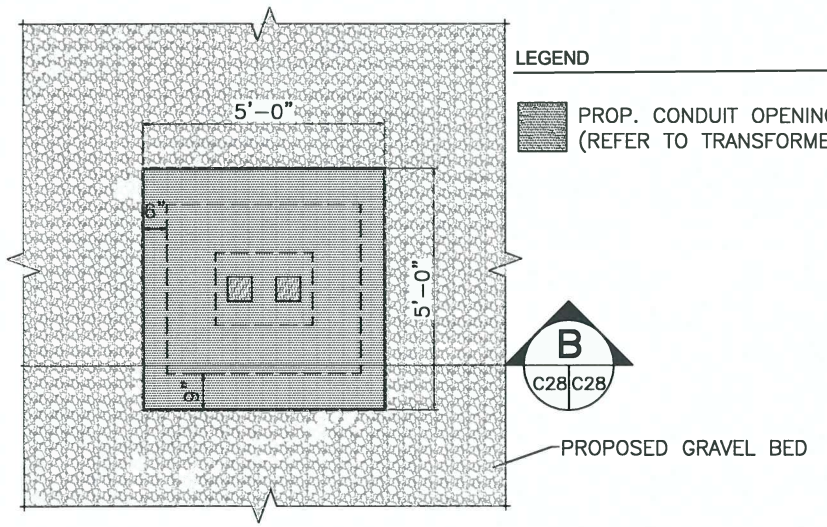

LEGEND

PROP. CONDUIT OPENINGS (REFER TO TRANSFORMER SPECS)

1 CONC. GENERATOR PAD PLAN

1 | C6 C28 — NOT TO SCALE

CONCRETE NOTES:

1. ALL CONCRETE SHALL HAVE MINIMUM COMPRESSIVE STRENGTH OF 4,000 P.S.I. AT 28 DAYS, UNLESS NOTED OTHERWISE.
2. ALL CONCRETE SHALL BE DESIGNED, MIXED, TRANSPORTED AND PLACED IN ACCORDANCE WITH THE LATEST SPECIFICATIONS OF THE AMERICAN CONCRETE INSTITUTE (ACI).
3. MAXIMUM SIZE OF COARSE AGGREGATE SHALL BE 1-1/2" AND FINE AGGREGATE SHALL BE CLEAN WITHOUT ANY CLAY PARTICLES.
4. ALL CONCRETE SHALL BE AIR ENTRAINED, CONFORMING TO ASTM C-260 MINIMUM AIR CONTENT, 6%. ANY OTHER ADDITIVES SHALL BE SUBJECT TO PRIOR APPROVAL BY THE ENGINEER.
5. REINFORCEMENT: ASTM A 615, GRADE 60.
6. LAPS AND SPLICES: MINIMUM 30 BAR DIAMETERS OF LARGER DIAMETER BAR. STAGGER ADJACENT BAR SPLICES MIN. 24".
7. REINFORCEMENT SHALL BE SECURELY SUPPORTED TO PREVENT BOTH VERTICAL AND HORIZONTAL MOVEMENT DURING PLACING OF CONCRETE.
8. TOP OF CONCRETE ELEVATION FOR PROPOSED CONC. GENERATOR PAD TO BE AT LEAST 103.75'.
9. CONTRACTOR TO VERIFY ELECTRICAL CONNECTIONS TO PAD MOUNT TRANSFORMER, GENERATOR AND AUTOMATIC TRANSFER SWITCH FOR CONDUIT OPENINGS ON CONCRETE PADS.

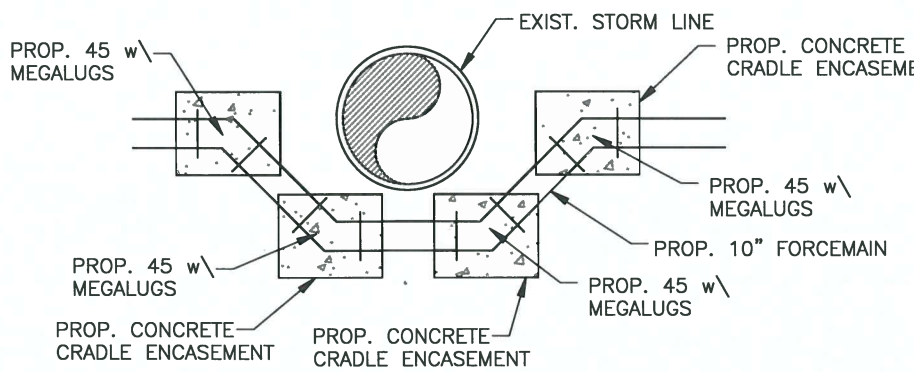

5 FORCE MAIN CROSSING UNDER STORM LINE

5 | C28 C28 — NOT TO SCALE

2 PADMOUNT TRANSFORMER CONC. PAD PLAN

2 | C6 C28 — NOT TO SCALE

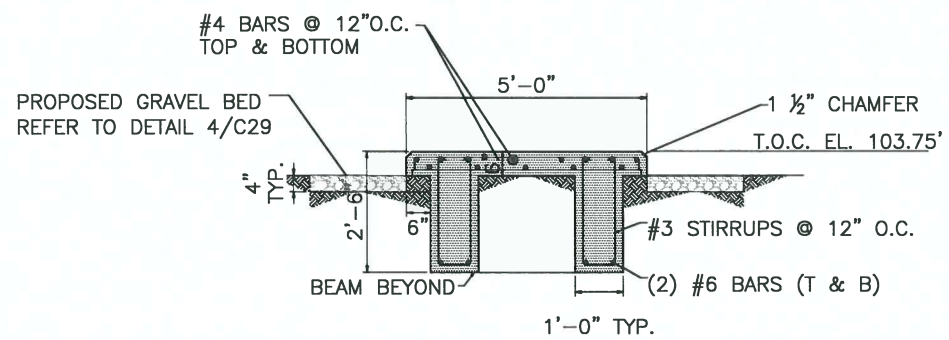

B SECTION AT PADMOUNT TRANSFORMER CONC. PAD

B | C28 C28 — NOT TO SCALE

FILE NAME: Z:\2020\Engineering\City of Edinburg\Lift Station #42 Rehab & Upgrade - Re Bid\Drawings\Civil\(29)-C28-CONCRETE SLAB DETAILS.dwg LAYOUT NAME: Layout1 PLOTTED: Thursday, June 04, 2020 - 8:33am USER: Owner

CONSULTANT'S SHEET
PROJECT NO. 20580-04

STATE OF TEXAS · U.S. NAVAL · 94121 · REGISTERED · PROFESSIONAL ENGINEER

IE
INTERNATIONAL CONSULTING ENGINEERS
1722 N. CLOSNER BLVD., SUITE B
EDINBURG, TX 78541
PHONE: 956.329.5404
FAX: 361.826.5806
T.B.P.E. FIRM REGISTRATION #F-10837

THE CITY OF Edinburg
431 W. UNIVERSITY DRIVE
EDINBURG, TX 78541
PHONE 956.388-8204
FAX: 956-380-7411

CITY OF EDINBURG
LIFT STATION 42 REHAB & UPGRADE-RE BID

CONCRETE SLAB DETAILS

DRAWING NO.
C28

SHEET 29 of 36

REVISION NO.	DATE	BY	DESCRIPTION

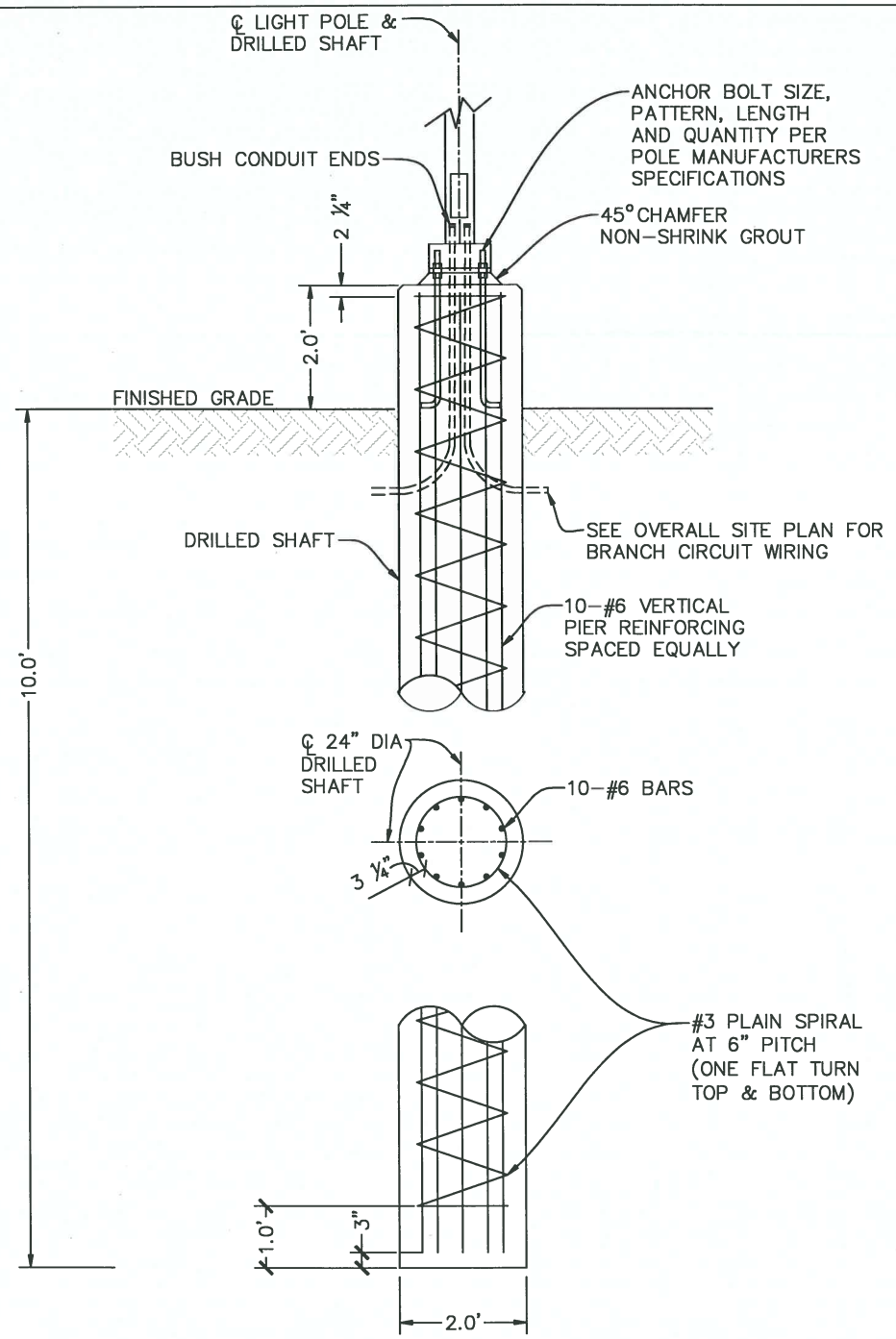

1 TYPICAL LIGHT POLE FOUNDATION DETAIL

C5 | C29

SCALE: N.T.S.

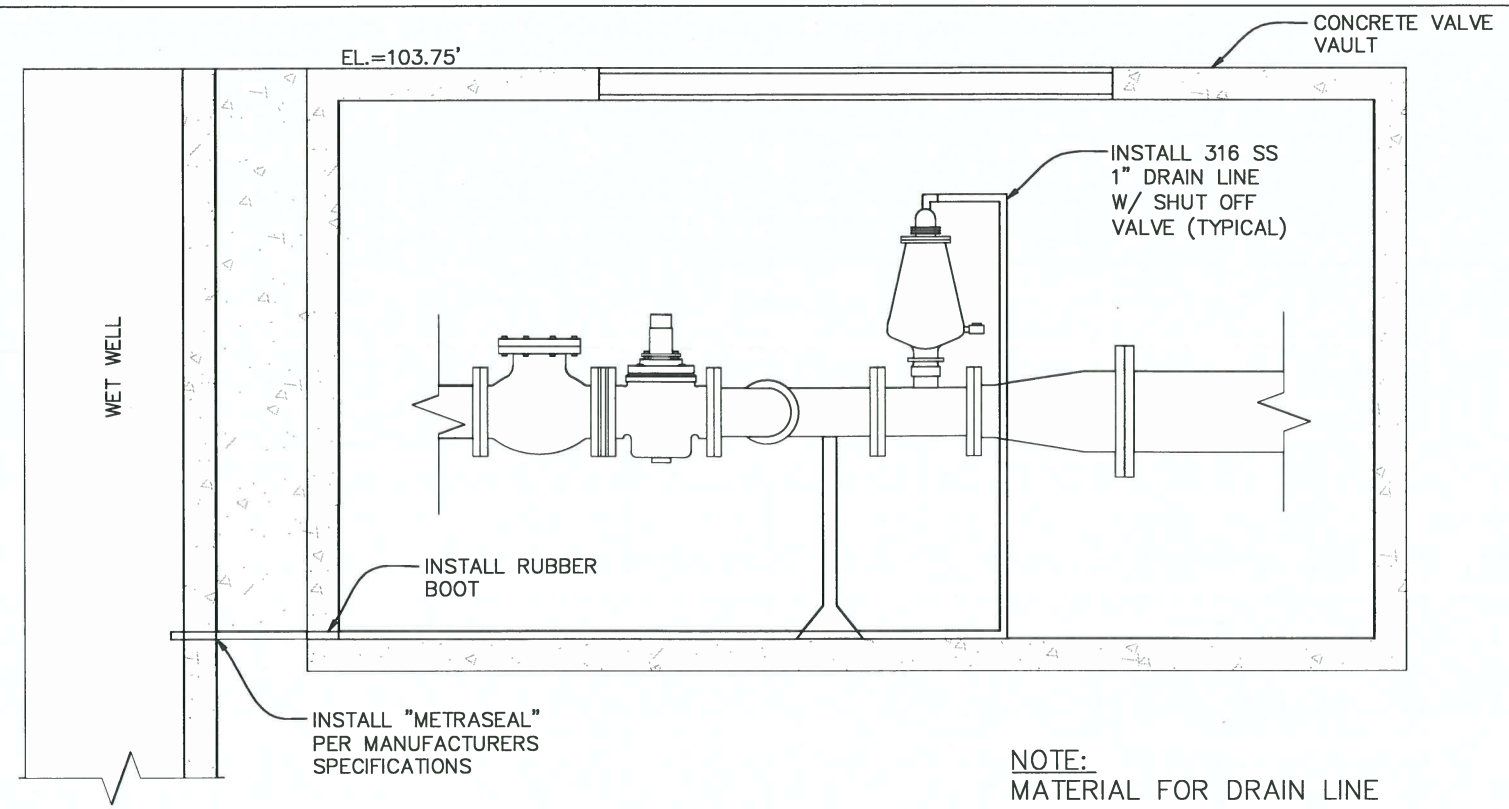

NOTE:
MATERIAL FOR DRAIN LINE AND APPURTENANCES NOT ON MATERIAL LIST

2 AIR RELEASE VENT DETAIL (VALVE VAULT)

C15 | C29

SCALE: N.T.S.

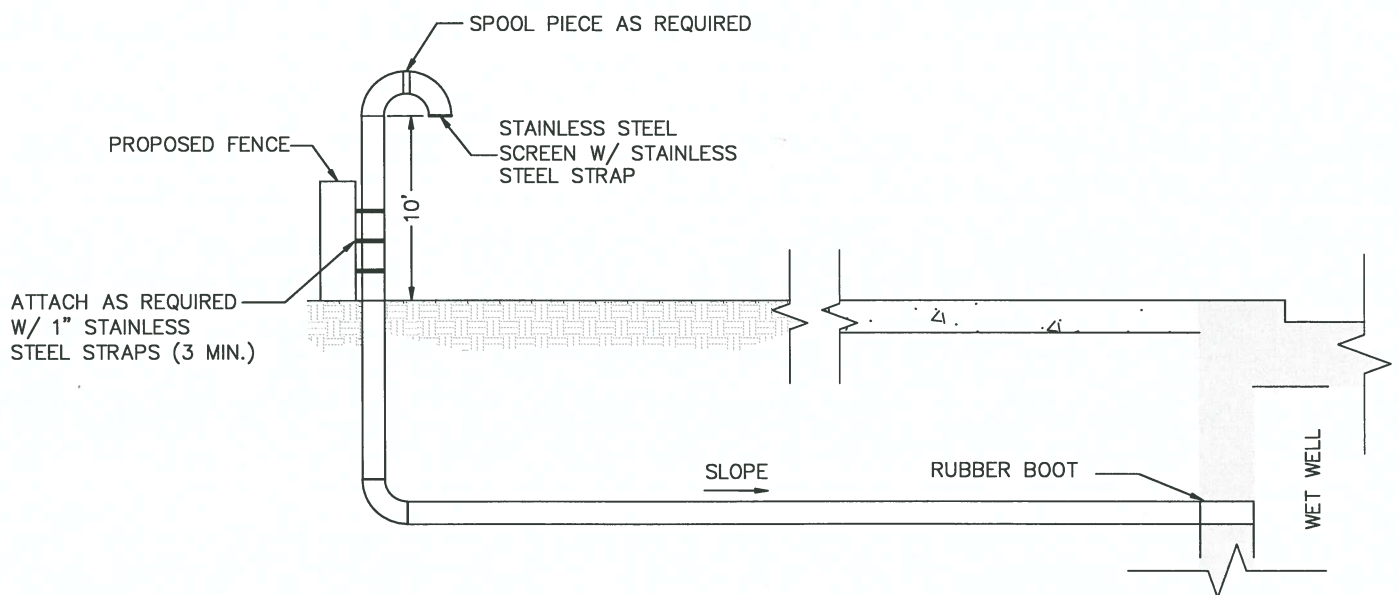

3 WET WELL VENT

C5 | C29

SCALE: N.T.S.

CONSULTANT'S SHEET
PROJECT NO. 20580-04

STATE OF TEXAS · LUIS A. NAVA · 94121 · LICENSED PROFESSIONAL ENGINEER
IOE
INTERNATIONAL CONSULTING ENGINEERS
1722 N. GLOSNER BLVD., SUITE B
EDINBURG, TX. 78541
PHONE: 956.329.8404
FAX: 361.826.8900
T.B.P.E. FIRM REGISTRATION #F - 10837
THE CITY OF Edinburg
415 W. UNIVERSITY DRIVE
EDINBURG, TX. 78541
PHONE: 956.388.8204
FAX: 956.383.7411

REVISION NO.	DATE	BY	DESCRIPTION

CITY OF EDINBURG
LIFT STATION 42 REHAB & UPGRADE-RE BID

LIGHT POLE FOUNDATION AND VENT DETAIL

DRAWING NO.
C29

SHEET 30 of 36

FILE NAME: Z:\2020\Engineering\City of Edinburg\Lift Station #42 Rehab & Upgrade - Re Bid\Drawings\Civil\(30)-C29 - LIGHT POLE & VV VENT.dwg LAYOUT NAME: Layout1 PLOTTED: Thursday, June 04, 2020 - 8:33am USER: Owner

NOTE:

1. NEW CONSTRUCTION SHALL INCLUDE, AS PART OF THE EXTERIOR LANDSCAPE, MIST SPRINKLER HEADS WITH TIMING DEVICE(S).
2. SPRINKLER SYSTEM WILL BE BASED ON MINIMUM PRESSURE AND MAXIMUM FLOW.
3. FLUSH AND ADJUST SPRINKLER HEADS FOR OPTIMUM PERFORMANCE. PREVENT OVER SPRAY ONTO WALKS, ROADWAYS, WALLS, FENCES AND BUILDINGS.
4. INSTALL A RAIN SWITCH/RAIN SENSOR.
5. **CONTRACTOR TO SUBMIT LANDSCAPE SUBMITTAL WITH PROPOSED IRRIGATION SYSTEM FROM LICENSED INSTALLER.**

CITY OF EDINBURG
DOC. NO. 3051915
O.R.H.C.T.
0.1906 AC.

CITY OF EDINBURG
DOC. NO. 584468
O.R.H.C.T.
0.121 AC.

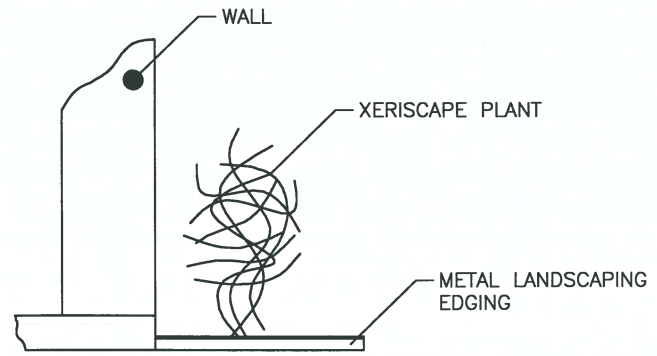

2 C29|C29 **LANDSCAPING DETAIL**

SCALE: N.T.S.

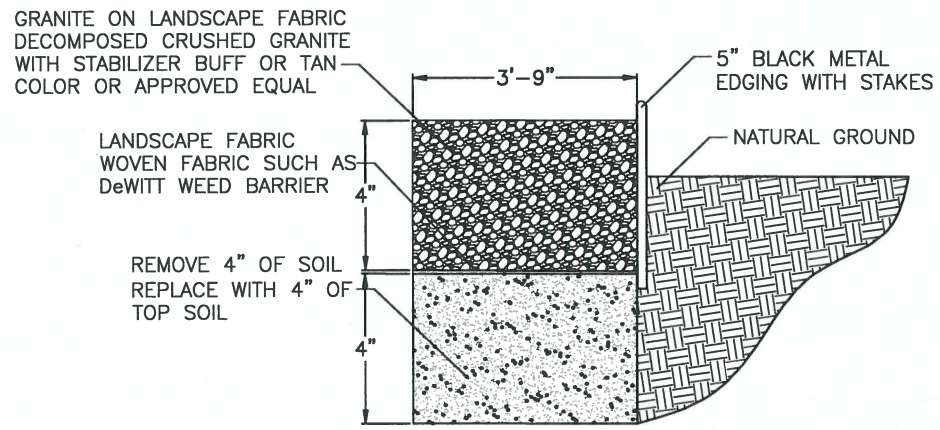

3 C29|C29 **PLANTER DETAIL**

SCALE: N.T.S.

	ORANGE CAPE HONEYSUCKLE (TECOMARIA CAPENSIS) (3 GALLON) 92 PLANTS IN TOTAL PLANT MUST BE WARRANTED FOR ONE YEAR
	ESPERANZA (TECOMA STANS) (3 GALLON) 23 PLANTS IN TOTAL PLANT MUST BE WARRANTED FOR ONE YEAR

CONSULTANT'S SHEET
PROJECT NO. 20580-04

LUIS A. NAVA 94121 LICENSED PROFESSIONAL ENGINEER STATE OF TEXAS

INTERNATIONAL CONSULTING ENGINEERS
1723 N. CLOSNER BLVD., SUITE B
EDINBURG, TX. 78541
PHONE: 956.329.8404
FAX: 361.826.8900
T.B.P.E. FIRM REGISTRATION #F - 10837

THE CITY OF Edinburg
415 W. UNIVERSITY DRIVE
EDINBURG, TX. 78541
PHONE: 956.388.8204
FAX: 956.383-7451

REVISION NO.	DATE	BY	DESCRIPTION

CITY OF EDINBURG
LIFT STATION 42 REHAB & UPGRADE-RE BID

LANDSCAPING PLAN

DRAWING NO. C30

SHEET 31 of 36

FILE NAME: Z:\2020\Engineering\City of Edinburg\Lift Station #42 Rehab & Upgrade – Re Bid\Drawings\Civil\(31)-C30-LANDSCAPING PLAN.dwg LAYOUT NAME: Layout1 PLOTTED: Thursday, June 04, 2020 – 8:33am USER: Owner

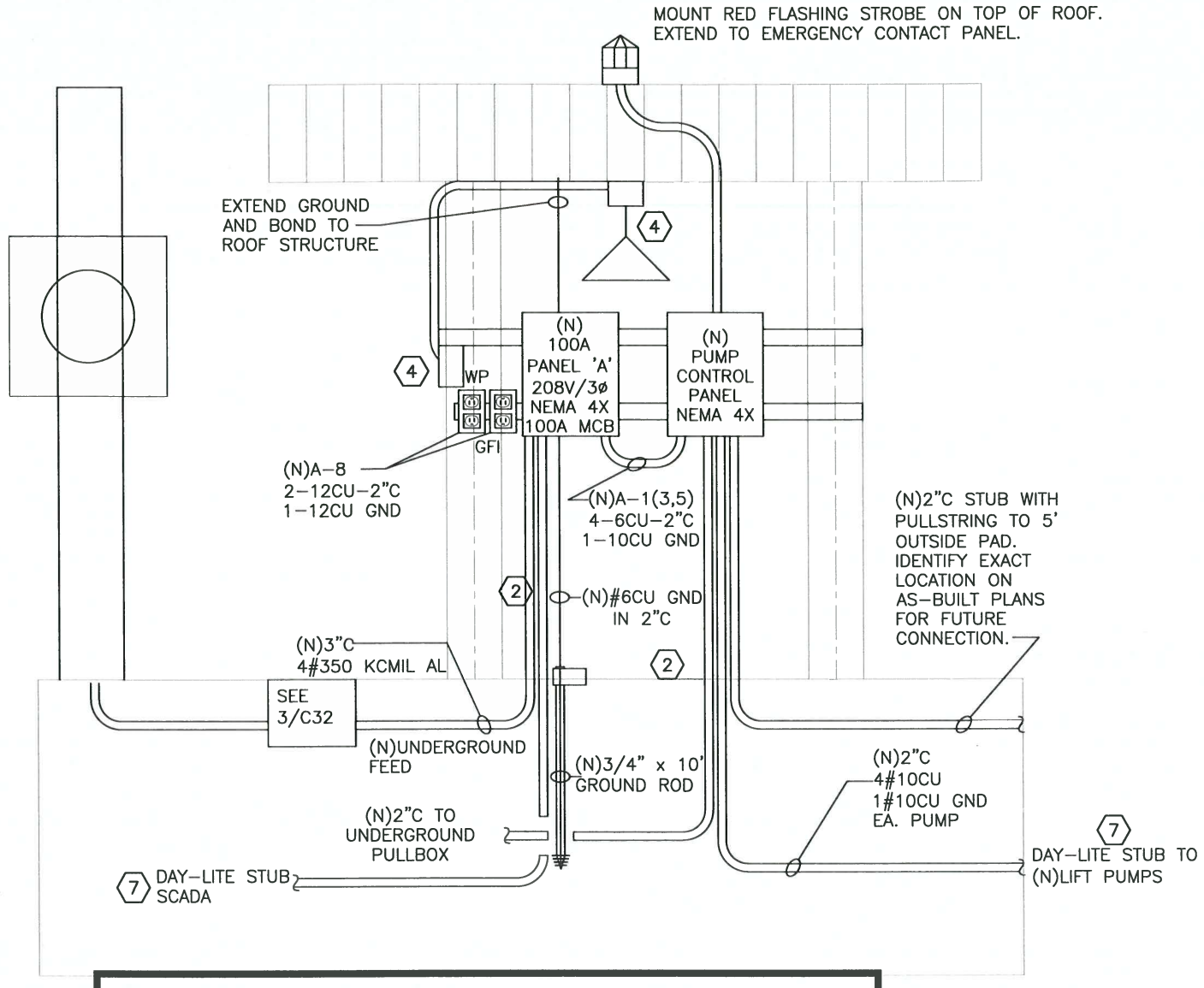

1 C30 C30 **ELECTRICAL SERVICE RACK ELEVATION**

SCALE: N.T.S.

GENERAL NOTES:

1. (E) = EXISTING, (N) = NEW, (D) = DEMO, (R) = RELOCATED
2. ELECTRICAL CONTRACTOR SHALL CONTACT POWER UTILITY COMPANY AND COORDINATE NEW SERVICE INSTALLATION PRIOR TO COMMENCING WORK.
3. ELECTRICAL CONTRACTOR SHALL INCLUDE IN HIS BID TO TO OWNER ANY CONSTRUCTION COSTS CHARGED BY POWER COMPANY FOR NEW UTILITY SERVICE EQUIPMENT AND TEMPORARY POWER FOR EXISTING LIFT STATION.
4. CONTRACTOR SHALL PROVIDE ALL COSTS ASSOCIATED WITH PROVIDING ENERGY USAGE COSTS UNTIL THE EXISTING LIFT STATION IS DECOMMISSIONED. ONCE THE EXISTING LIFT STATION IS DECOMMISSIONED, TRANSFER POWER UTILITY SERVICE ACCOUNT TO CITY OF EDINBURG FOR PERMANENT POWER.

SHEET NOTES:

1. INTERCEPT EXISTING PUMP HOUSE PANEL CIRCUIT AND EXTEND UNDERGROUND TO NEW PUMP LOCATION. PROVIDE AND INSTALL ALL MATERIALS AND LABOR, INCLUDING TRENCHING FOR FEEDER INSTALLATION.
2. NEW PAD FOR LIFT PUMP BREAKER PANEL AND CONTROL PANELS. COORDINATE SPECIFIC LOCATION AND MOUNTING REQUIREMENTS WITH CIVIL PLANS. SEE C4 PLANS.
3. SEE DETAIL 1/C30.
4. LITHONIA VC42L M6 (OR APPROVED EQUAL) SURFACE/WALL MOUNTED WEATHERPROOF SERVICE LIGHT FIXTURE. PROVIDE AND INSTALL SINGLE-POLE, SINGLE-THROW, 277V. 20A RATED SWITCH.
5. PROVIDE AND INSTALL ALL MATERIAL AS NECESSARY FOR TEMPORARY POWER. COORDINATE SPECIFIC PHASING DETAILS WITH OWNER. REMOVE PANEL, AND DISCONNECT RECEPTACLES AT COMPLETION OF CONSTRUCTION. PULLBOX TO REMAIN AND SERVE NEW LIFT STATION PUMPS. SEE DETAIL 3/C32 FOR PULLBOX.
6. FOR SCADA REQUIREMENTS. PROVIDE PULLSTRINGS AND CAP ALL STUBS WITH WATERTIGHT MATERIAL.

ELECTRICAL LOAD ANALYSIS

LOAD		AMPS A	AMPS B	AMPS C
LIFT PUMP No. 1	30 HP	38	38	38
LIFT PUMP No. 2	30 HP	38	38	38
MISC		10		10
25% OF LARGEST MOTOR		9.5	9.5	9.5
TOTAL LOAD		95.5	85.5	95.5
SERVICE AMPACITY 480/277V		100	100	100
SPARE AMPACITY		4.5	14.5	4.5

USE MIN. 42 KAIC RATED DEVICES AND BRACING

CONSULTANT'S SHEET
PROJECT NO. 20580-04

STATE OF TEXAS · SERGIO A. SANCHEZ · 94465 · LICENSED PROFESSIONAL ENGINEER · 03/30/21

INTERNATIONAL CONSULTING ENGINEERS
1223 N. CLOSNER BLVD., SUITE B
EDINBURG, TX. 78541
PHONE: 956.320.5404
FAX: 361.653.2000
T.B.P.E. FIRM REGISTRATION #F- 10637

THE CITY OF Edinburg
415 W. UNIVERSITY DRIVE
EDINBURG, TX. 78541
PHONE: 956-383-6004
FAX: 956-383-7411

REVISION NO.	DATE	BY	DESCRIPTION

CITY OF EDINBURG
LIFT STATION 42 REHAB & UPGRADE-RE BID

ELECTRICAL PLAN

DRAWING NO. C31

SHEET 32 of 36

FILE NAME: Z:\2020\Engineering\City of Edinburg\Lift Station #42 Reheb & Upgrade - Re Bid\Drawings\Cwr\(32)-C31- ELECTRICAL PLAN.dwg LAYOUT NAME: Layout1 PLOTTED: Thursday, May 21, 2020 - 1:52pm USER: Owner

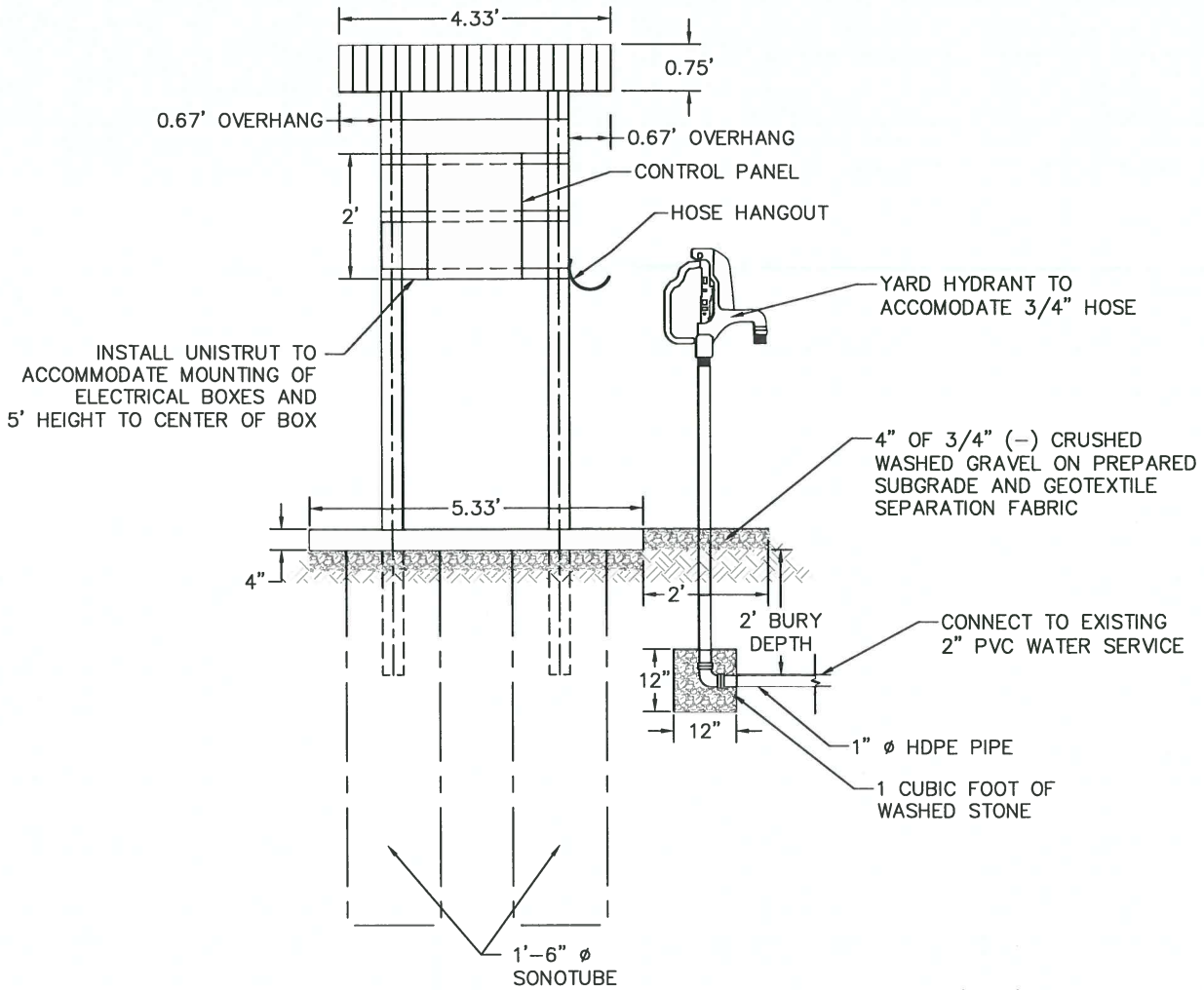

1 CONTROL PANEL STATION
C31 C31
SCALE: N.T.S.

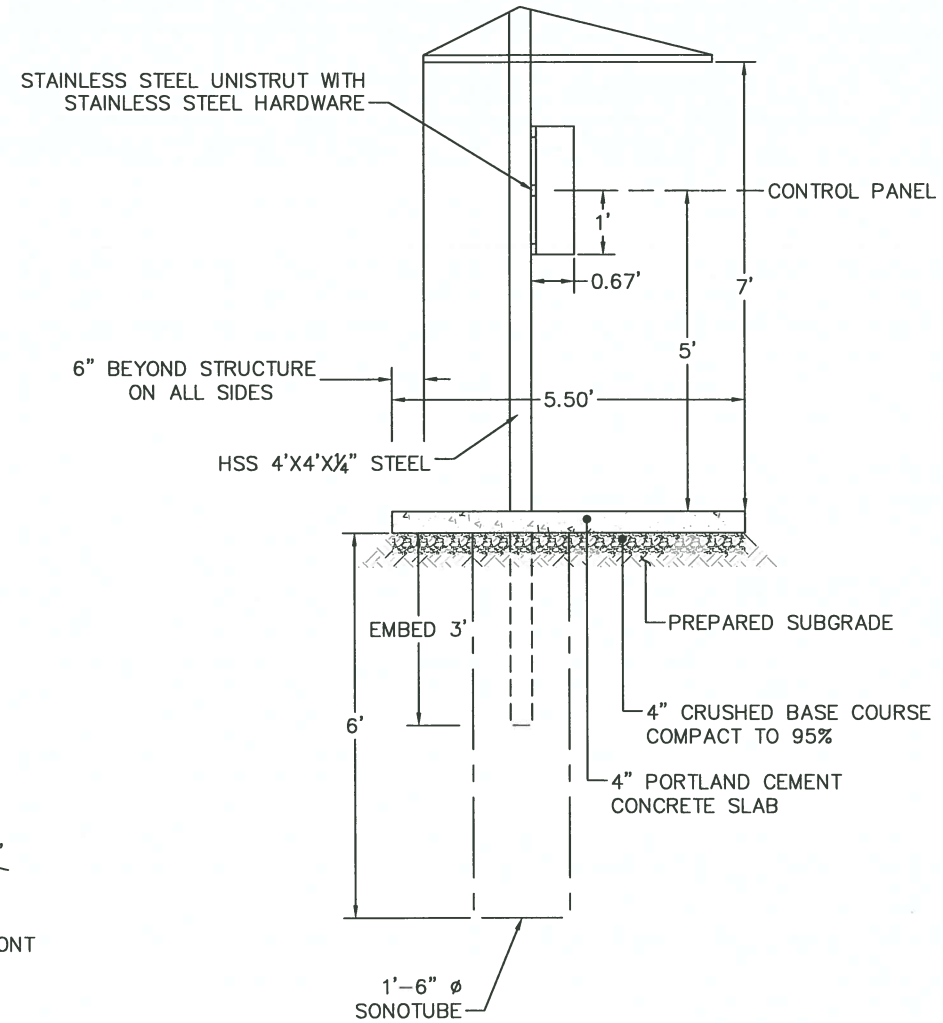

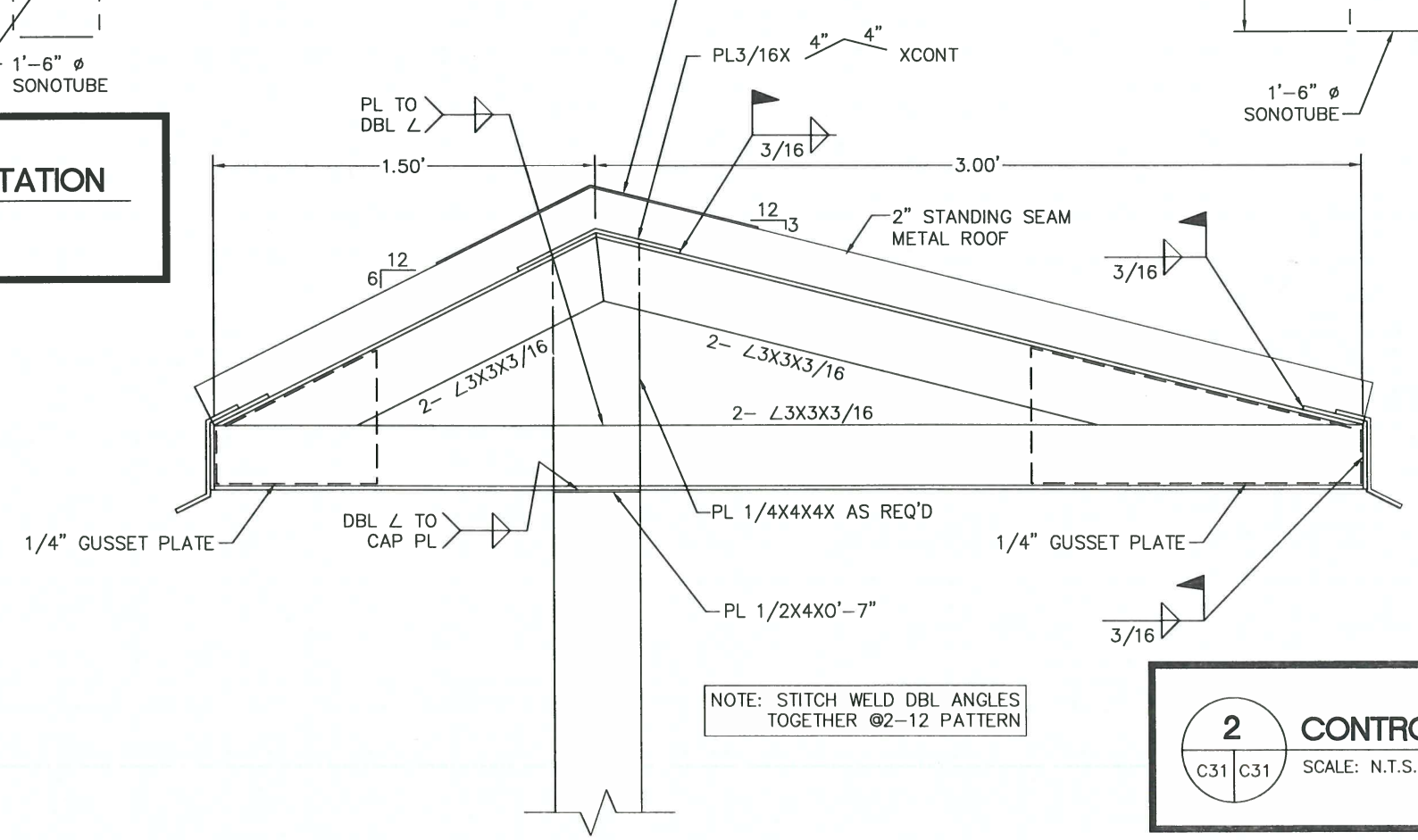

NOTE: STITCH WELD DBL ANGLES TOGETHER @2-12 PATTERN

2 CONTROL PANEL ROOF
C31 C31
SCALE: N.T.S.

CONSULTANT'S SHEET
PROJECT NO. 20580-04

STATE OF TEXAS
SERGIO A. SANCHEZ
94465
LICENSED
PROFESSIONAL ENGINEER
05/30/20

ICE
INTERNATIONAL CONSULTING ENGINEERS
PHONE: 956.329.5404
FAX: 361.826.5806
1722 N. CLOSNER BLVD., SUITE B
EDINBURG, TX 78541
T.B.P.E. FIRM REGISTRATION #F-10837

THE CITY OF Edinburg
415 W. UNIVERSITY DRIVE
EDINBURG, TX 78541
PHONE: 956.388-8204
FAX: 956-383-7411

CITY OF EDINBURG
LIFT STATION 42 REHAB & UPGRADE-RE BID

CONTROL PANEL STATION

DRAWING NO.
C32

SHEET 33 of 36

REVISION NO.	DATE	BY	DESCRIPTION

FILE NAME: Z:\2020\Engineering\City of Edinburg\Lift Station #42 Rehab & Upgrade - Re Bid\Drawings\Civil\(33)-C32 - CONTROL PANEL STATION.dwg LAYOUT NAME: Layout1 PLOTTED: Thursday, May 21, 2020 - 1:52pm USER: Owner

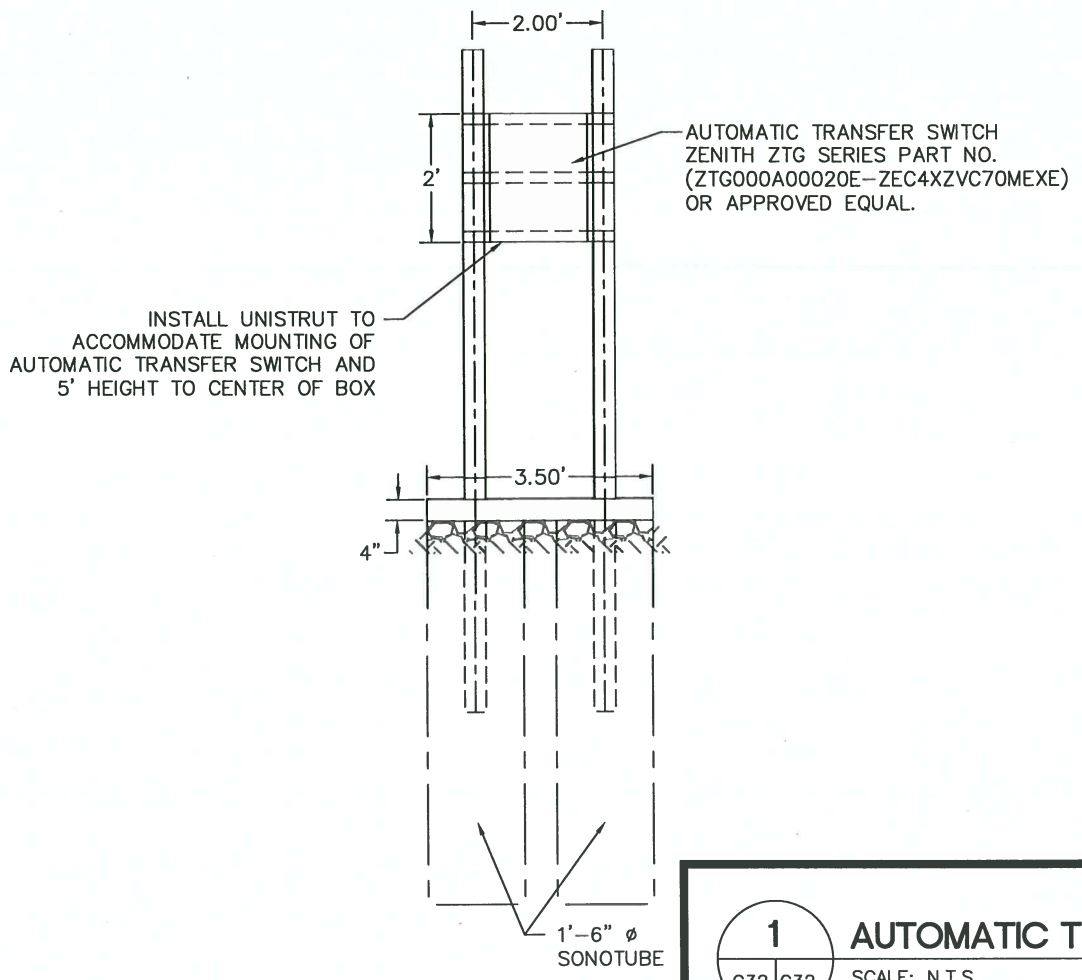

1 C32 C32 **AUTOMATIC TRANSFER SWITCH STATION**

SCALE: N.T.S.

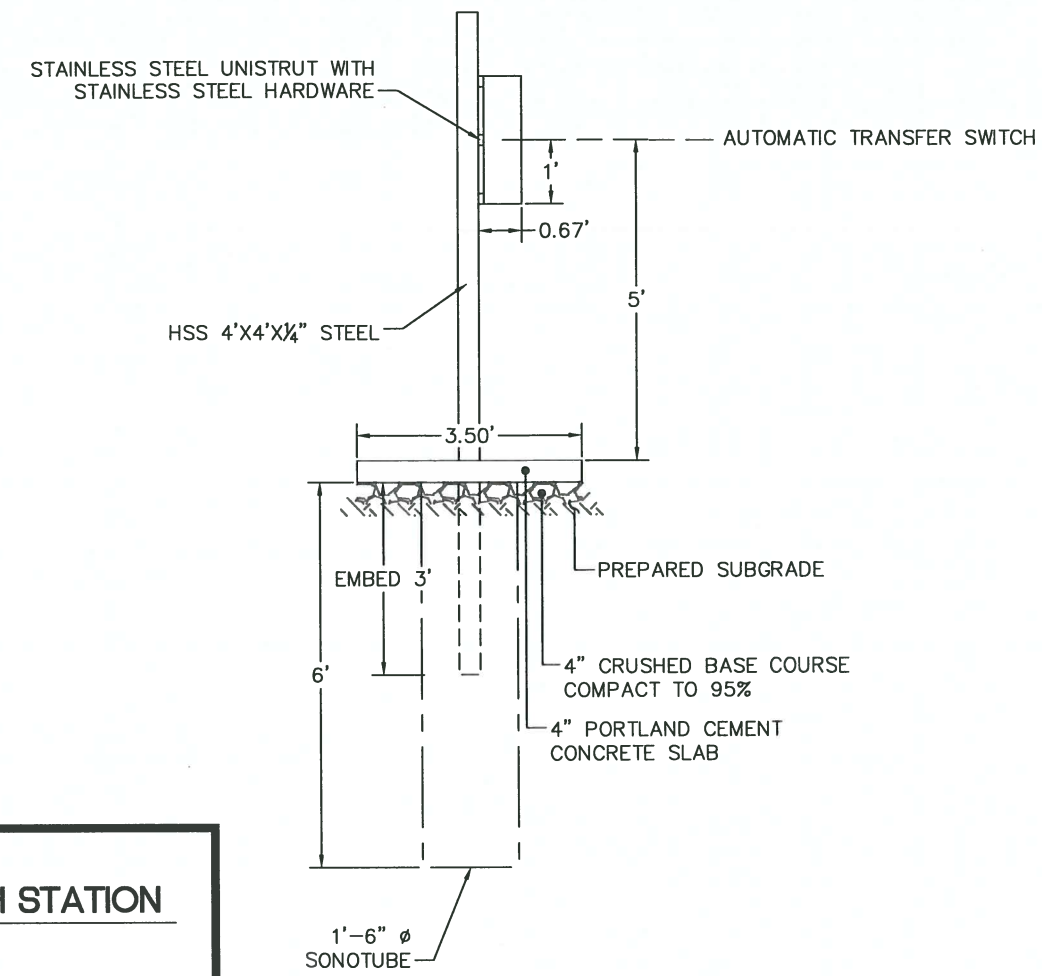

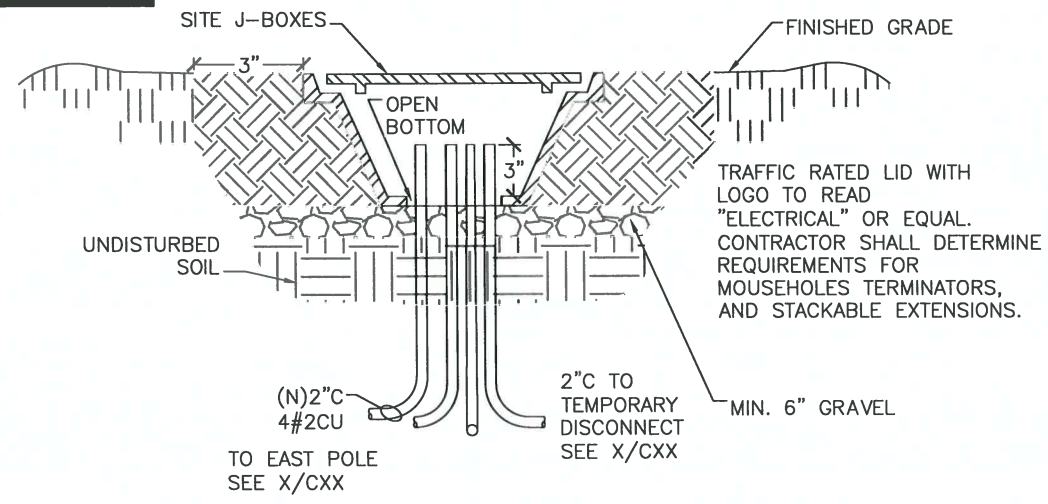

CONDUITS-TO OR FROM J-BOXES. ALL STUB OUTS SHALL HAVE PULL-STRINGS AND CAPS TO PREVENT WATER INFILTRATION.

NOTE-EXTEND STUB OUTS BEYOND EDGE 2' PROVIDE 1-2" STUB OUT (SCADA)

3 C32 C32 **PULL BOX DETAIL**

SCALE: N.T.S.

CONSULTANT'S SHEET
PROJECT NO. 20580-04

STATE OF TEXAS · SERGIO A. SANCHEZ · 94465 · LICENSED PROFESSIONAL ENGINEER

INTERNATIONAL CONSULTING ENGINEERS
1722 N. CLOSNER BLVD., SUITE B
EDINBURG, TX. 78541
PHONE: 956.320.5404
FAX: 361.826.8806
T.B.P.E. FIRM REGISTRATION #F - 10837

THE CITY OF Edinburg
415 W. UNIVERSITY DRIVE
EDINBURG, TX. 78541
PHONE: 956.388.8204
FAX: 956.383.7411

CITY OF EDINBURG
LIFT STATION 42 REHAB & UPGRADE-RE BID

AUTOMATIC TRANSFER SWITCH STATION

DRAWING NO.
C33

SHEET 34 of 36

REVISION NO.	DATE	BY	DESCRIPTION

FILE NAME: Z:\2020\Engineering\City of Edinburg\Lift Station #42 Rehab & Upgrade - Re Bid\Drawings\Civil\(34)-C33 - AUTOMATIC TRANSFER SWITCH.dwg LAYOUT NAME: Layout1 PLOTTED: Thursday, May 21, 2020 - 1:32pm USER: Owner

NOTES:

1. FILTER SOCKS SHALL BE A MINIMUM OF 8" DIAMETER.
2. FILTER SHALL BE BOUND BY EITHER WIRE NYLO OR POLYPROPYLENE STRING. THE FILTER SOCKS SHALL BE COMPOSED ENTIRELY OF VEGETABLE MATTER.
3. FILTER SOCKS SHALL BE EMBEDDED IN THE SOIL A MINIMUM OF 4" AND WHERE POSSIBLE 1/2 THE HEIGHT OF THE HAY SOCK.
4. FILTER SOCKS SHALL BE PLACED IN A ROW WITH ENDS TIGHTLY ABUTTING THE ADJACENT SOCKS. THE SOCKS SHALL BE PLACED WITH BINDINGS PARALLEL TO THE GROUND.
5. FILTER SOCKS SHALL BE SECURELY ANCHORED IN PLACE WITH 3/8" DIA. REBAR OR 2" X 2" WOOD STAKES, DRIVEN THROUGH THE FILTER SOCKS. THE FIRST STAKE SHALL BE ANGLED TOWARDS THE PREVIOUSLY LAID SOCK TO FORCE THE HAY SOCKS TOGETHER.
6. THE GUIDELINES SHOWN HEREON ARE SUGGESTION ONLY AND MAY BE MODIFIED BY THE ENGINEER.
7. NO HAY BALES ARE ALLOWED.

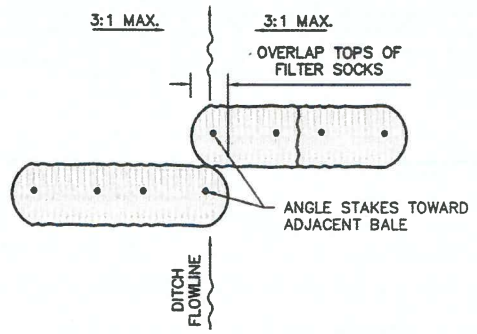

PLAN VIEW

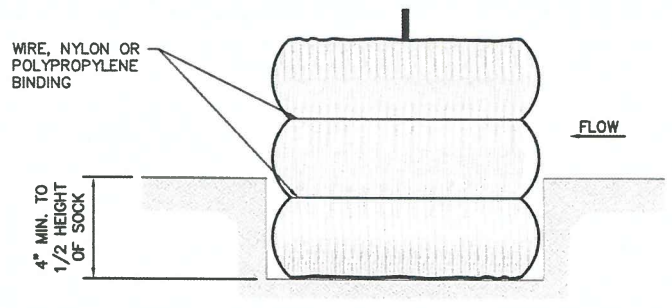

SECTION B–B

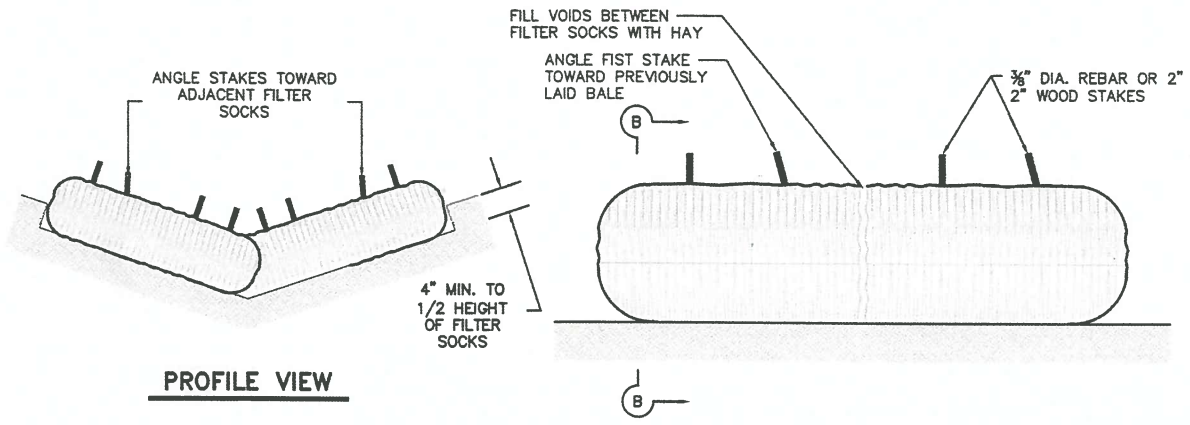

PROFILE VIEW

STW-1

HAY SOCKS EROSION CONTROL DETAILS

SCALE: N.T.S.	REVISED: IP/OC
DATE: MARCH, 2014	DRAWN BY: RMM

THE CITY OF EDINBURG
PUBLIC WORKS DEPARTMENT

Mar 12, 2014 - 10:41AM

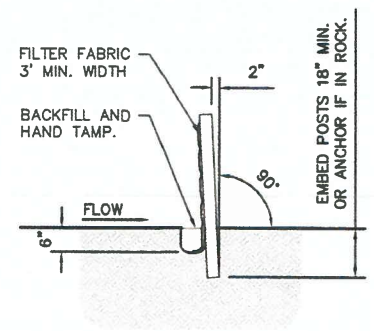

SECTION A–A

GENERAL NOTES

1. THE GUIDELINES SHOW HEREON ARE SUGGESTIONS ONLY AND MAY BE MODIFIED BY THE ENGINEER.

SEDIMENT CONTROL FENCE USAGE GUIDELINES

A SEDIMENT CONTROL FENCE MAY BE CONSTRUCTED NEAR THE DOWNSTREAM PERIMETER OF A DISTURBED AREA ALONG A CONTOUR TO INTERCEPT SEDIMENT FROM OVERLAND RUNOFF. A 2 YEAR STORM FREQUENCY MAY BE USED TO CALCULATE THE FLOW RATE TO BE FILTERED.

SEDIMENT CONTROL FENCE SHOULD BE SIZED TO FILTER A MAX. FLOW THROUGH RATE OF 100 GPM/FT². SEDIMENT CONTROL FENCE IS NOT RECOMMENDED TO CONTROL EROSION FROM A DRAINAGE AREA LARGER THAN 2 ACRES.

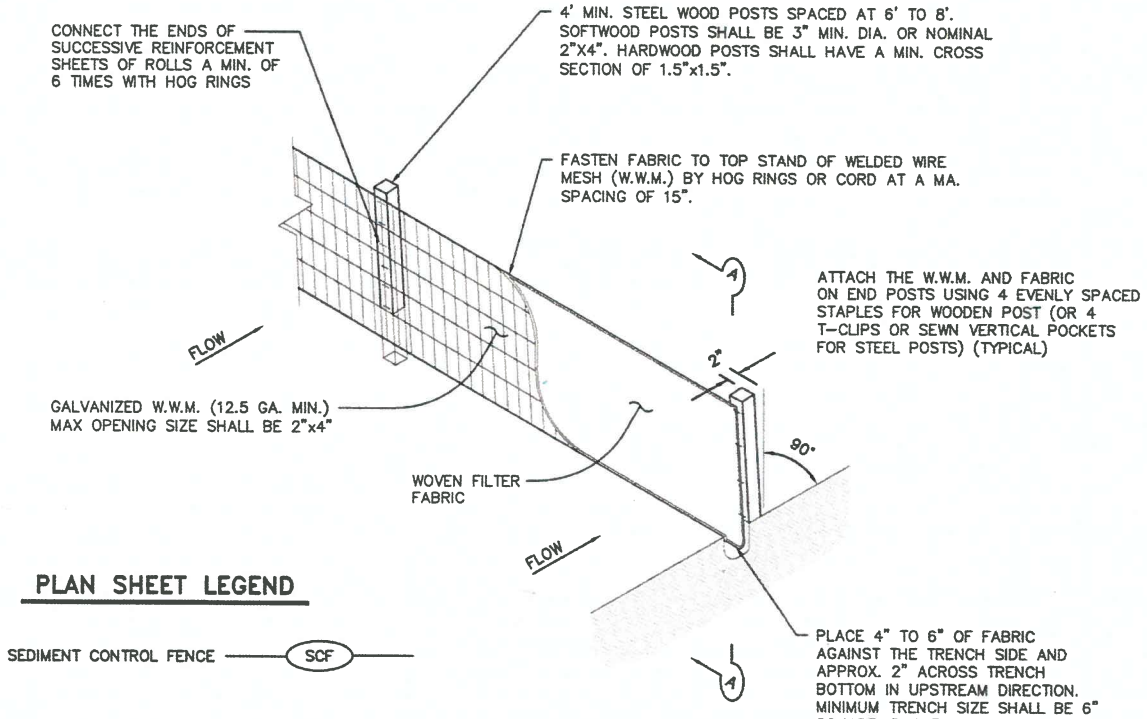

PLAN SHEET LEGEND

SEDIMENT CONTROL FENCE — SCF

STW-2

TEMPORARY SEDIMENT CONTROL FENCE – DETAILS

SCALE: N.T.S.	REVISED: IP/PNL
DATE: MARCH, 2014	DRAWN BY: RMM

THE CITY OF EDINBURG
PUBLIC WORKS DEPARTMENT

Mar 12, 2014 - 10:42AM

CONSULTANT'S SHEET
PROJECT NO. 20580-04

IOE
INTERNATIONAL CONSULTING ENGINEERS
1722 N. CLOSNER BLVD., SUITE B
EDINBURG, TX 78541
PHONE: 956.220.5404
FAX: 361.826.5809
T.B.P.E. FIRM REGISTRATION #F-10837

THE CITY OF EDINBURG
415 W. UNIVERSITY DRIVE
EDINBURG, TX 78541
PHONE: 956.388.8204
FAX: 956-388-7411

REVISION NO.	DATE	BY	DESCRIPTION

CITY OF EDINBURG
LIFT STATION 42 REHAB & UPGRADE-RE BID

EROSION CONTROL - 1

DRAWING NO.
C34
SHEET 35 of 36

FILE NAME: Z:\2020\Engineering\City of Edinburg\LIft Station #42 Rehab & Upgrade - Re Bid\Drawings\Civil\(35)-C34-EROSION CONTROL -1.dwg LAYOUT NAME: Layout1 PLOTTED: Thursday, June 04, 2020 - 9:55am USER: Owner

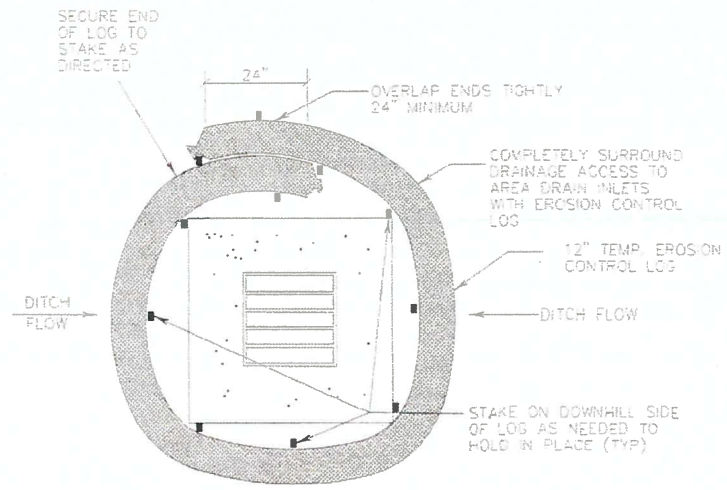

DROP INLET SEDIMENT TRAP

NTS

DI-ST

PLANS SHEET LEGEND

DI-ST
DROP INLET SEDIMENT TRAP

CI-ST
CURB INLET SEDIMENT TRAP

SEDIMENT BASIN & TRAP USAGE GUIDELINES

A sediment trap may be used to precipitate sediment out of runoff draining from an unstabilized area.

Traps: the drainage area for a sediment trap should not exceed 5 acres. The trap capacity should be 1800 CF/Acre (0.5" over the drainage area).

Sediment traps should be placed in the following locations:

1. Immediately preceding drain inlets
2. Just before the drainage enters a water course
3. Just before the drainage leaves the right of way
4. Just before the drainage leaves the construction limits where drainage flows away from the project

The trap should be cleaned when the capacity has been reduced by 1/2 or the sediment has accumulated to a depth of 1', whichever is less.
Cleaning and removal of accumulated sediment deposits is incidental and will not be paid for seperately.

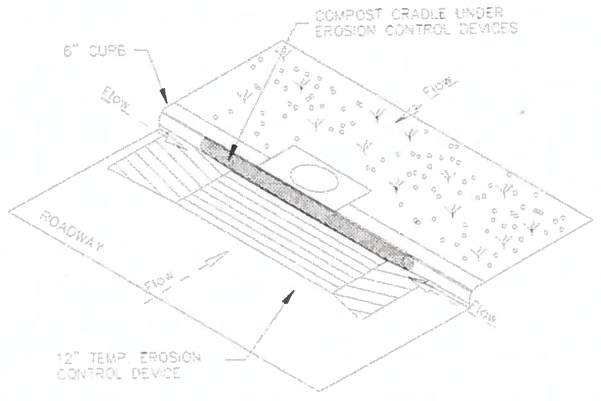

CURB INLET SEDIMENT TRAP

NTS

CI-ST

GENERAL NOTES

1. LENGTHS OF EROSION CONTROL LOGS SHALL BE IN ACCORDANCE WITH MANUFACTURER'S RECOMMENDATIONS AND AS REQUIRED FOR THE PURPOSE INTENDED. MAXIMUM LENGTH OF LOGS SHALL BE 30' FOR 12" DIAMETER LOGS.
2. UNLESS OTHERWISE DIRECTED, USE BIODEGRADABLE OR PHOTODEGRADABLE CONTAINMENT MESH ONLY WHERE LOG WILL REMAIN IN PLACE AS PART OF A VEGETATIVE SYSTEM. FOR TEMPORARY INSTALLATIONS, USE RECYCLABLE CONTAINMENT MESH.
3. STUFF LOGS WITH SUFFICIENT FILTER MATERIAL TO ACHIEVE DENSITY THAT WILL HOLD SHAPE WITHOUT EXCESSIVE DEFORMATION.
4. STAKES SHALL BE 2" X 2" WOOD 4' LONG, EMBEDDED SUCH THAT 2" PROTRUDES ABOVE LOG.
5. COMPOST CRADLE MATERIAL IS INCIDENTAL AND WILL NOT BE PAID FOR SEPARATELY.

Mar 12, 2014 - 10:43AM

STW-4

TEMPORARY EROSION CONTROL LOGS – 2

SCALE: N.T.S.	REVISED: O.C.
DATE: MARCH, 2014	DRAWN BY: RMM

THE CITY OF EDINBURG
PUBLIC WORKS DEPARTMENT

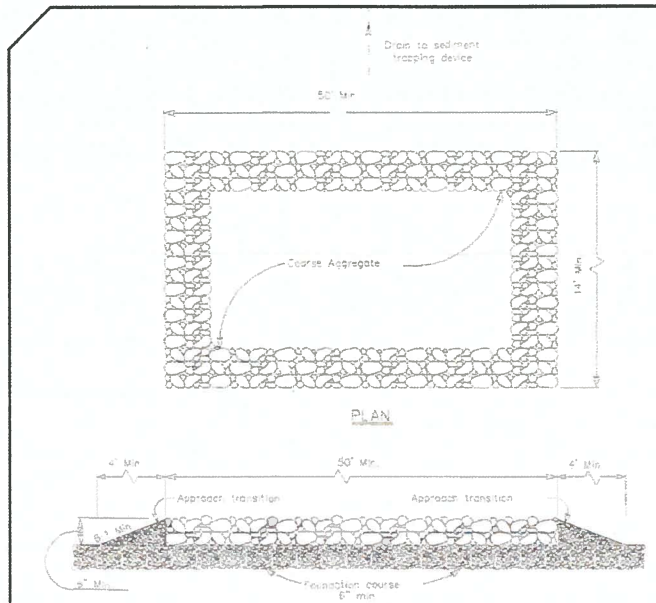

CONSTRUCTION EXIT (TYPE 1)

GENERAL NOTES

1. The length of the type 1 construction exit shall be as indicated on the plans, but not less than 50'.
2. The coarse aggregate should be open graded with a size of 4" to 8".
3. The approach transitions should be no steeper than 6:1 and constructed as directed by the Engineer.
4. The construction exit foundation course shall be flexible base, bituminous concrete, portland cement concrete or other material as approved by the Engineer.
5. The construction exit shall be graded to allow drainage to a sediment trapping device.
6. The guidelines shown hereon are suggestions only and may be modified by the Engineer.

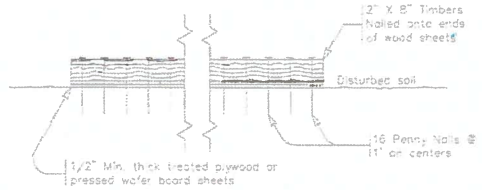

SECTION A-A

CONSTRUCTION EXIT (TYPE 3)

GENERAL NOTES

1. The length of the type 3 construction exit shall be as shown on the plans, or as directed by the Engineer.
2. The type 3 construction exit may be constructed from open graded crushed stone with a size of two to four inches spread a min. of 4" thick to the limits shown on the plans.
3. The treated timber planks shall be #2 grade min., and should be free from large and loose knots.
4. The guidelines shown hereon are suggestions only and may be modified by the Engineer.

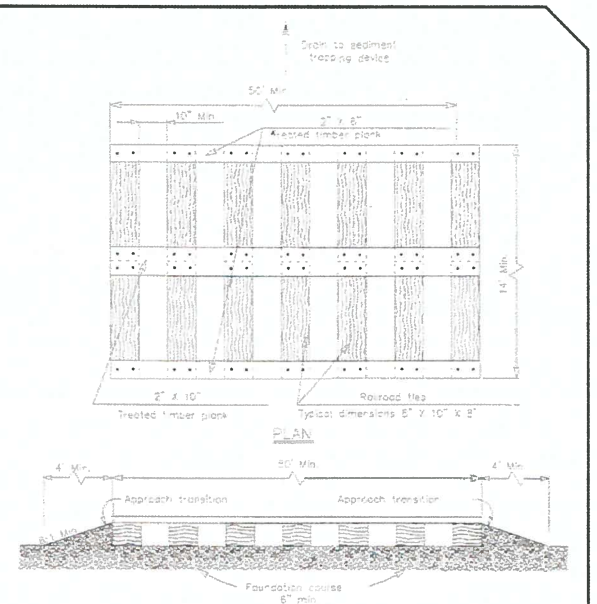

CONSTRUCTION EXIT (TYPE 2)

GENERAL NOTES

1. The length of the type 2 construction exit shall be as indicated on the plans, but not less than 50'.
2. The treated timber planks shall be attached to the railroad ties with 1/2" x 6" min. lag bolts. Other fasteners may be used as approved by the Engineer.
3. The treated timber planks shall be #2 grade min., and should be free from large and loose knots.
4. The approach transitions shall be no steeper than 6:1 and constructed as directed by the Engineer.
5. The construction exit foundation course shall be flexible base, bituminous concrete, portland cement concrete or other material as approved by the Engineer.
6. The construction exit should be graded to allow drainage to a sediment trapping device.
7. The guidelines shown hereon are suggestions only and may be modified by the Engineer.

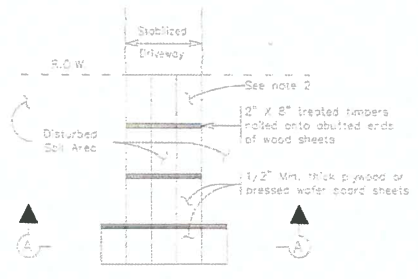

PLAN

Mar 12, 2014 - 10:44AM

STW-5

TEMPORARY EROSION CONTROL CONSTRUCTION EXIT

SCALE: N.T.S.	REVISED: O.C.
DATE: MARCH, 2014	DRAWN BY: RMM

THE CITY OF EDINBURG
PUBLIC WORKS DEPARTMENT

CONSULTANT'S SHEET
PROJECT NO. 20580-04

STATE OF TEXAS · LUIS J. NAVA · 84121 · LICENSED PROFESSIONAL ENGINEER

INTERNATIONAL CONSULTING ENGINEERS
1723 N. CLOSNER BLVD., SUITE B
EDINBURG, TX 78541
PHONE: 956.329.8404
FAX: 361.826.5906
T.B.P.E. FIRM REGISTRATION #F- 10837

REVISION NO.	DATE	BY	DESCRIPTION

THE CITY OF Edinburg
415 W. UNIVERSITY DRIVE
EDINBURG, TX 78541
PHONE: 956.388.8204
FAX: 956-383-7411

CITY OF EDINBURG
LIFT STATION 42 REHAB & UPGRADE-RE BID

EROSION CONTROL - 2

DRAWING NO. C35

SHEET 36 of 36

FILE NAME: Z:\2020\Engineering\City of Edinburg\Lift Station #42 Rehab & Upgrade - Re Bid\Drawings\Civil\(36)-C35-EROSION CONTROL -2.dwg LAYOUT NAME: Layout1 PLOTTED: Thursday, June 04, 2020 - 8:34am USER: Owner